Three Phase Phase VSC Averaged Model

- Switching model

Power Circuit

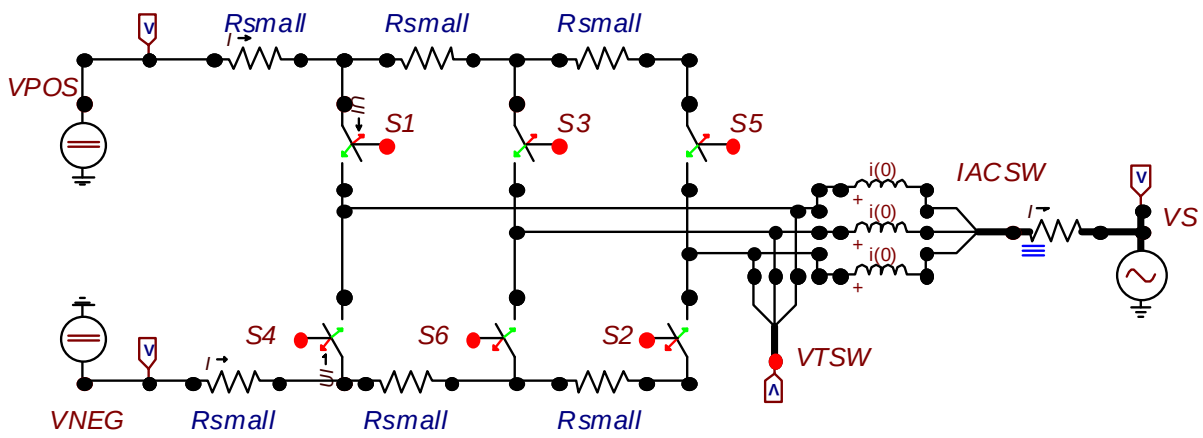

- Averaged model

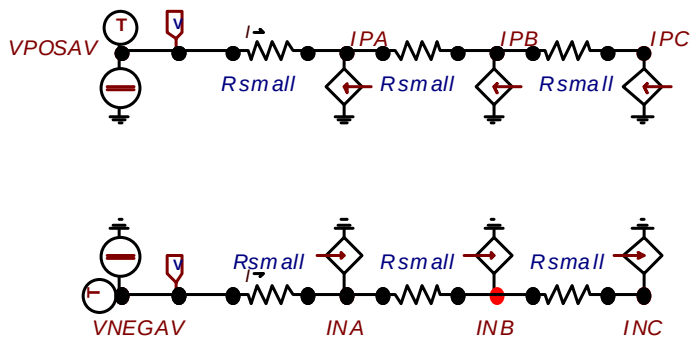

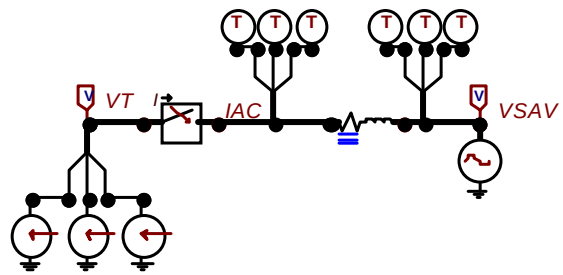

- Voltage command

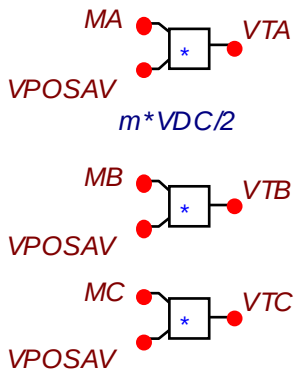

- Current commands

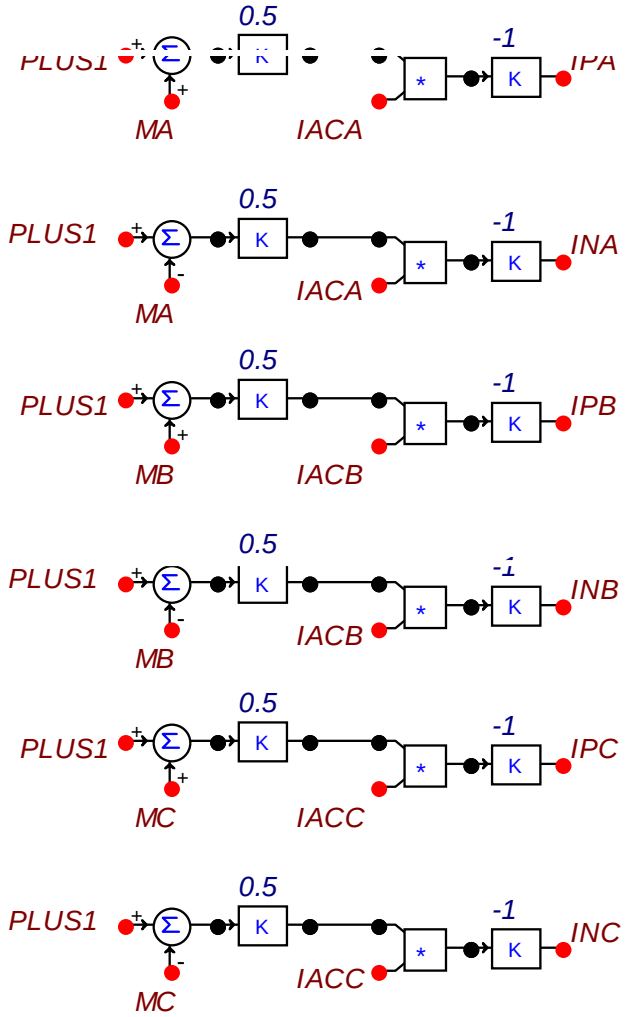

- Generate modulating functions

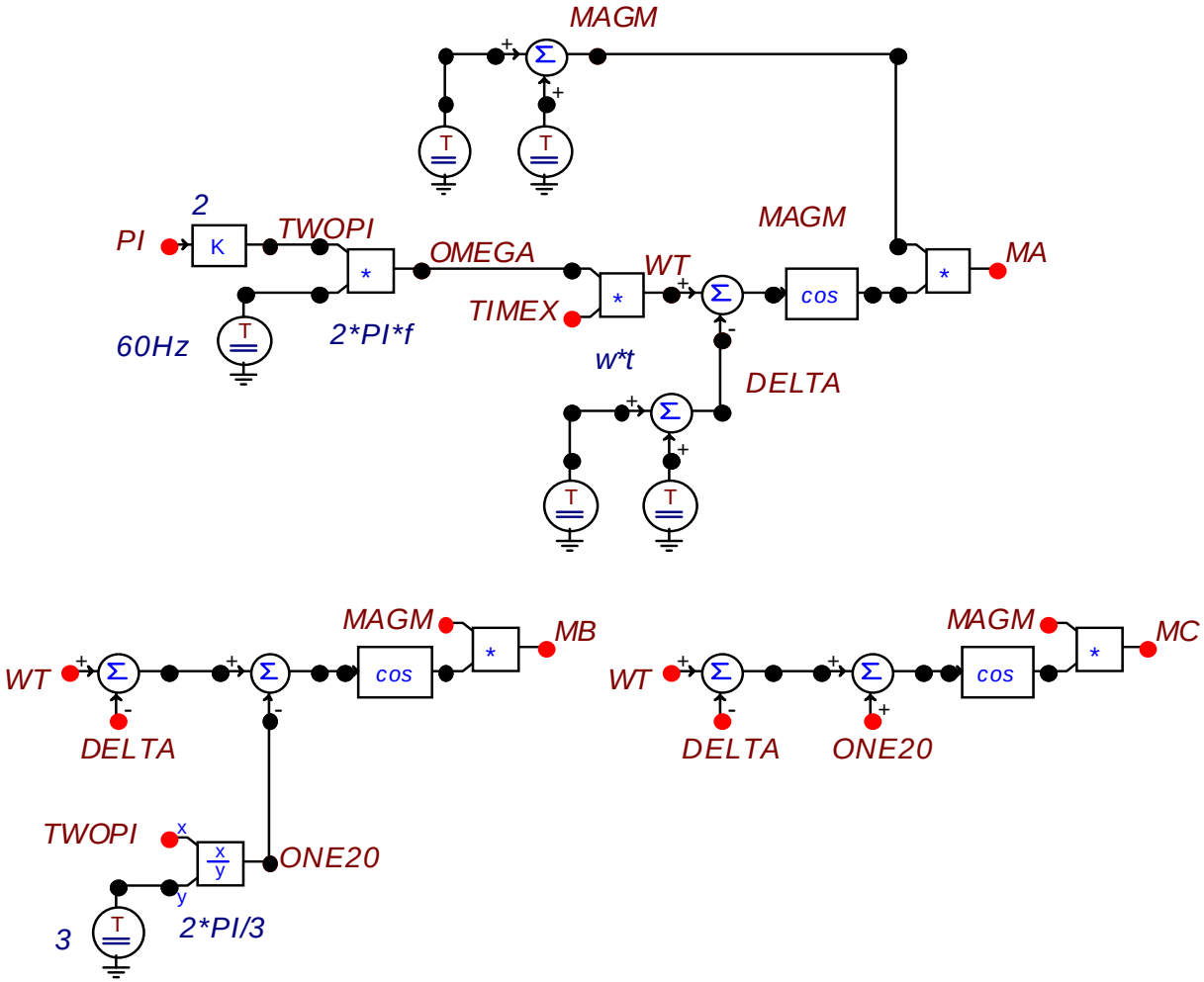

- Firing pulse generation

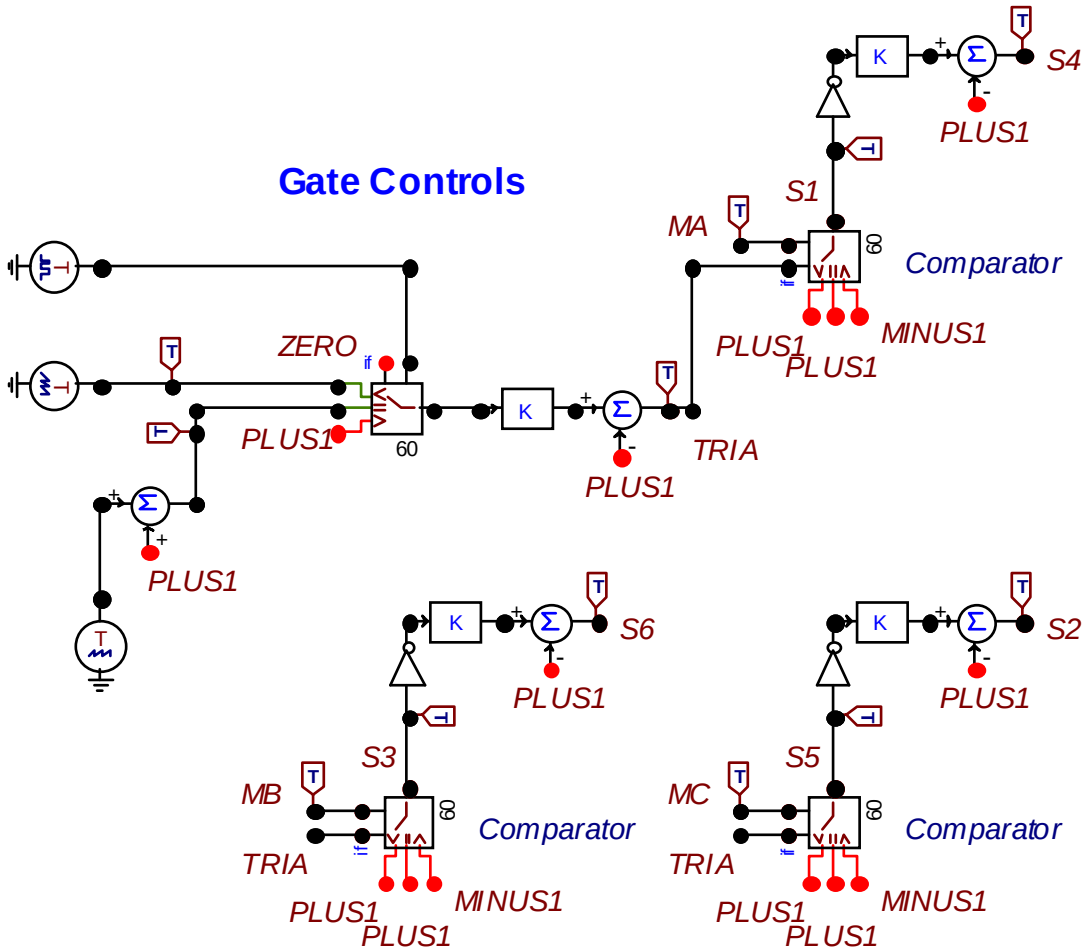

Phase A currents

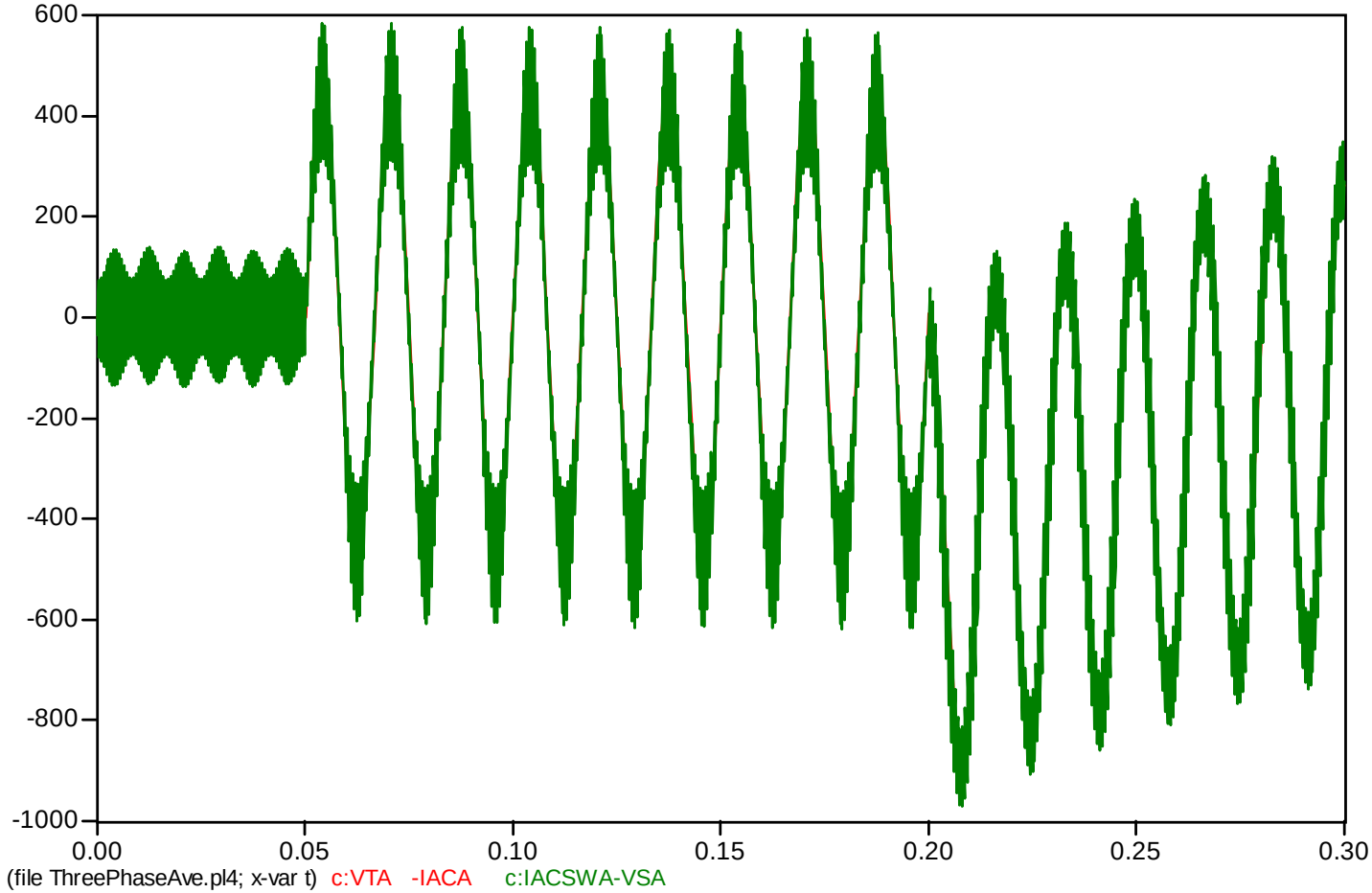

Zoomed currents

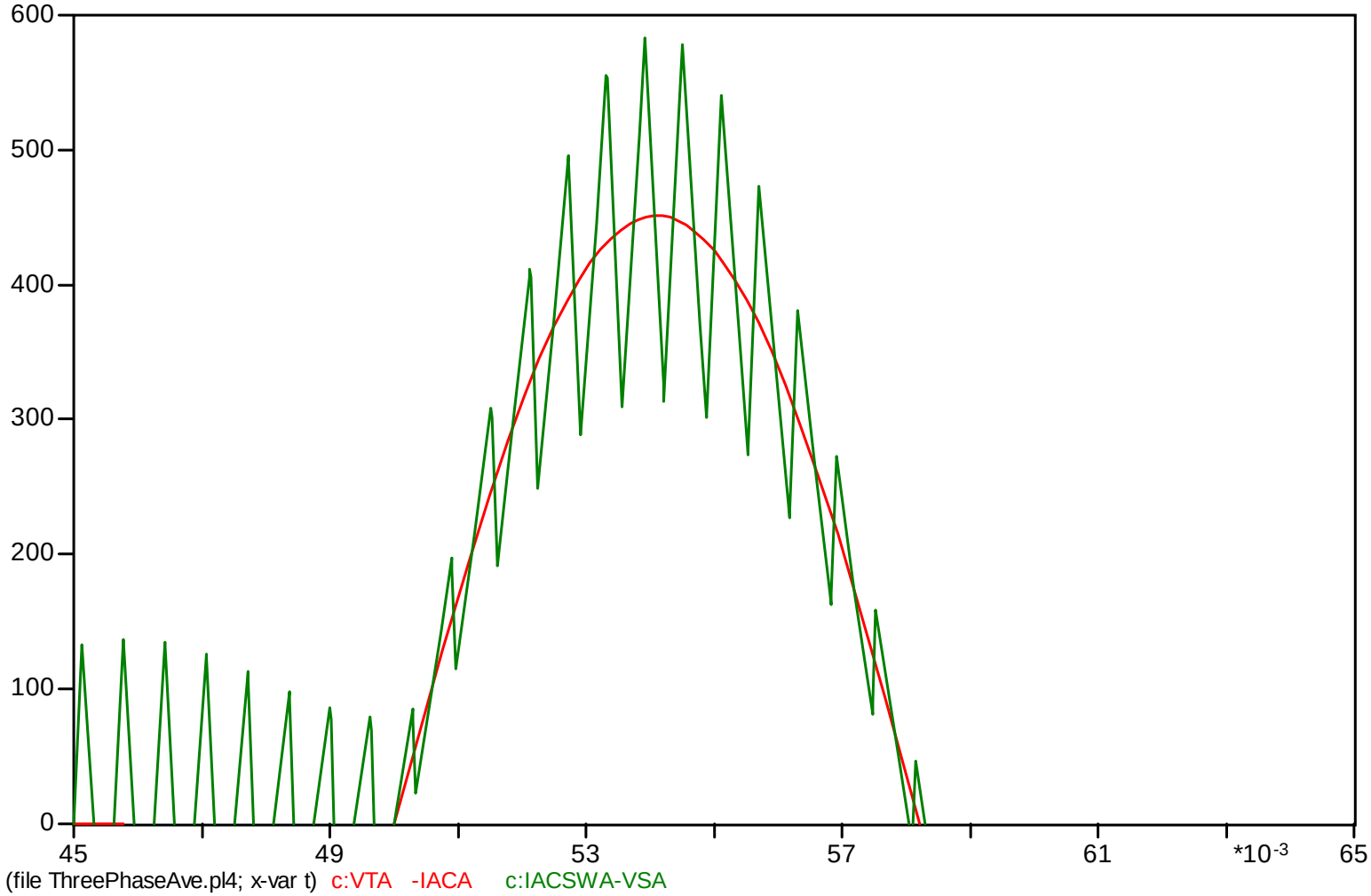

Positive side DC currents

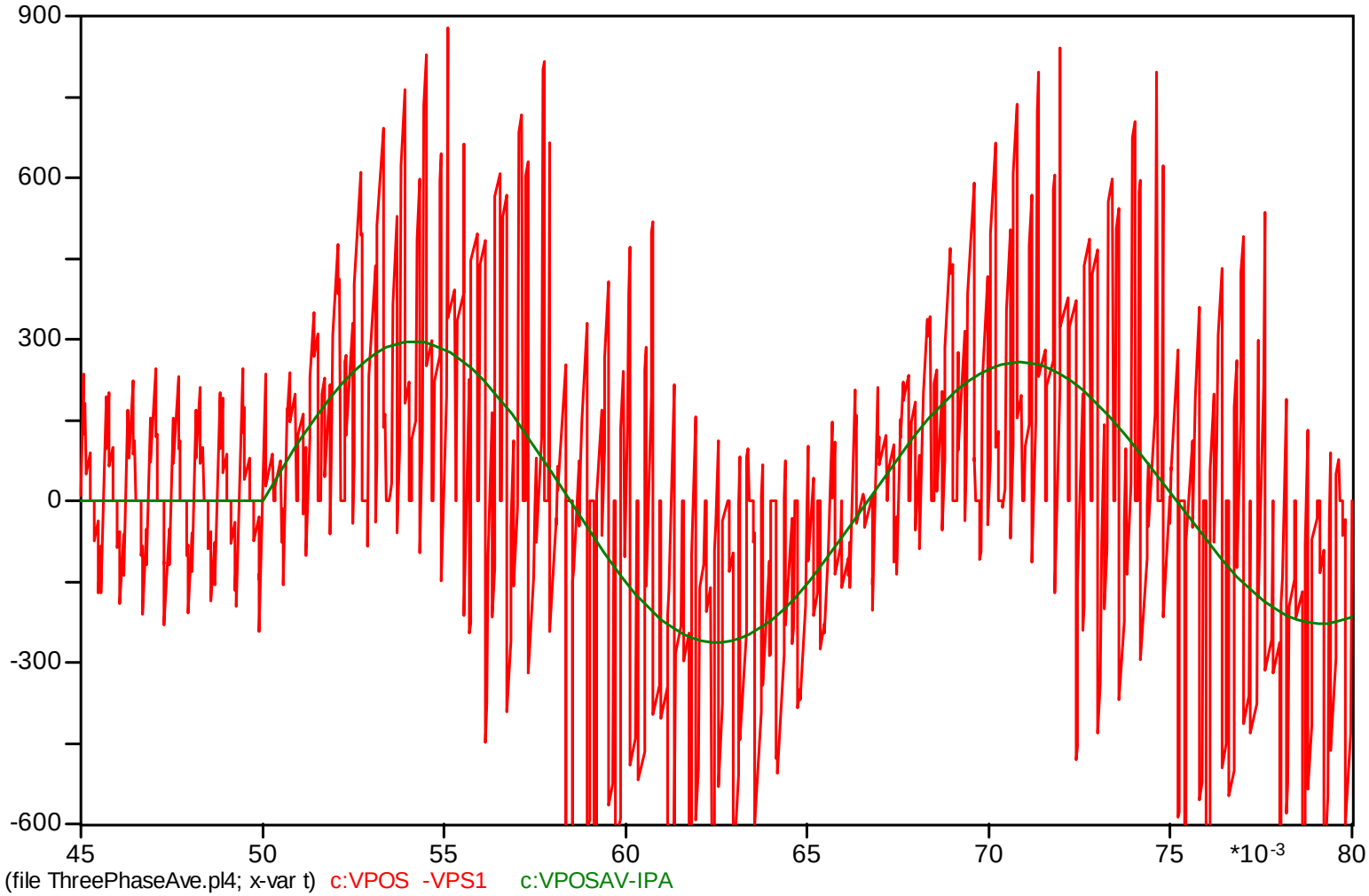

Vt from switching and averaged

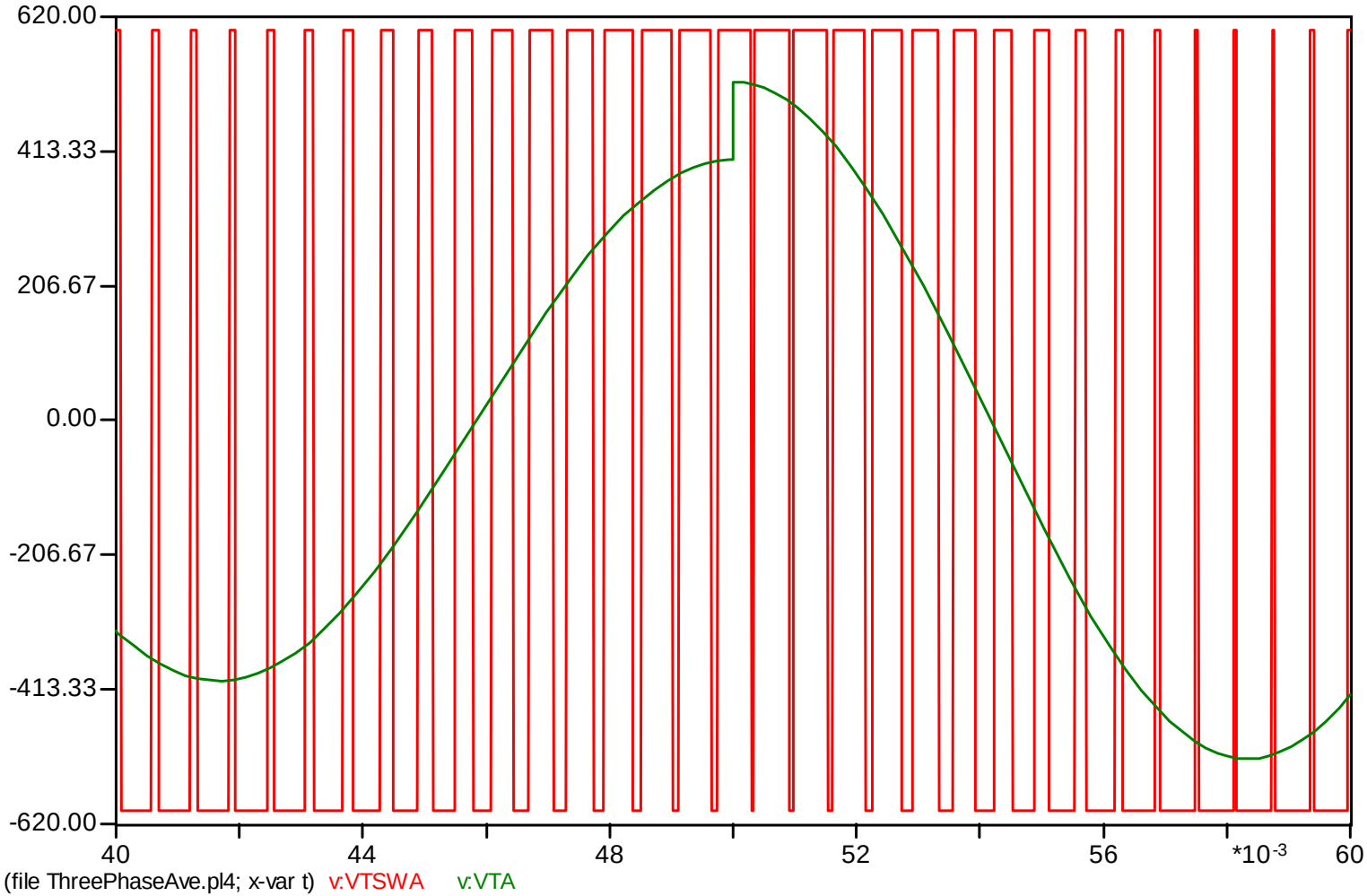

Fundamental component from averaged model

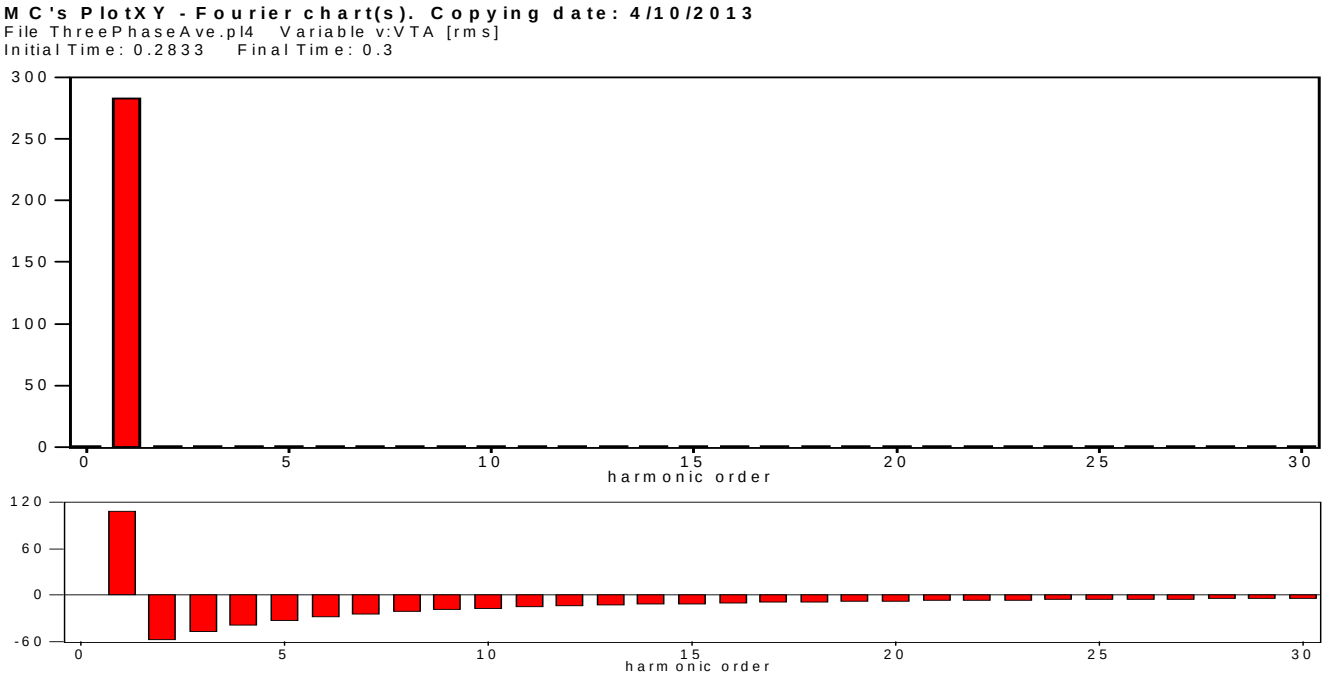

V1 := 282.9V

at 107.1deg

MC's PlotXY - Fourier chart(s). Copying date: 4/10/2013
File ThreePhaseAve.pl4 Variable v:VTSWA [rms]
Initial Time: 0.2833 Final Time: 0.3

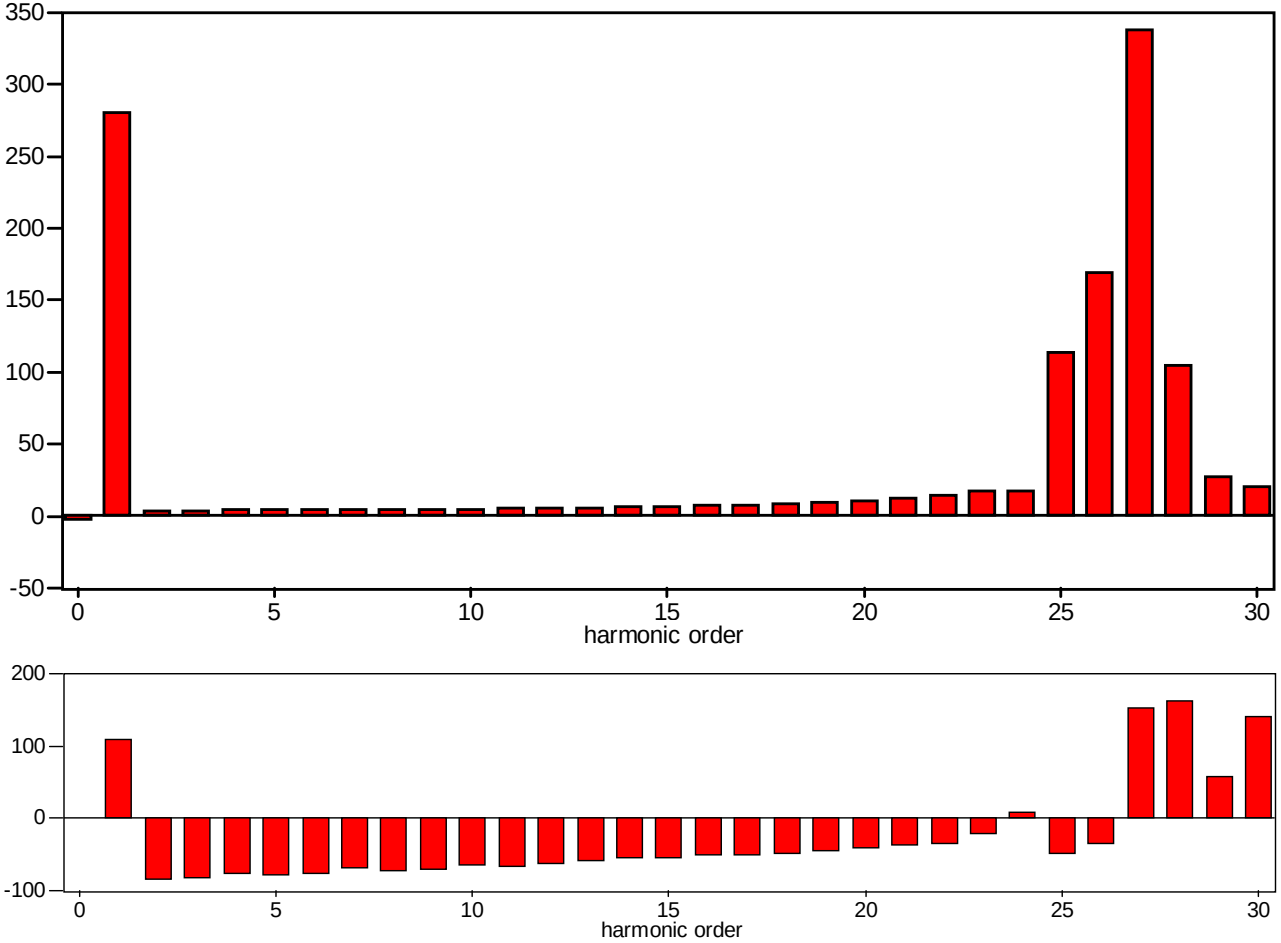

V1 := 279.6V

at 107.4 deg