ECE 404/504: Lecture 39

Error fix in the ATP and EMTDC files

- ***You do not need to fix this in your homework assignments unless you want to.***

$$P_{3ph} = \frac{3}{2}\left(v_{sd}\cdot i_d + v_{sq}\cdot i_q + v_0\cdot i_0\right)$$

- This is implemented correctly in the files

$$Q_{3ph} = \frac{3}{2}\left(v_{sq}\cdot i_d - v_{sd}\cdot i_q\right)$$

- The simulation files implement the negative of this.

Corrected implementation in ATPDraw:

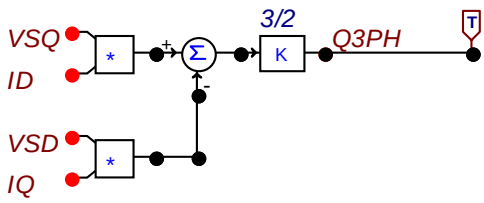

And in PSCAD/EMTDC

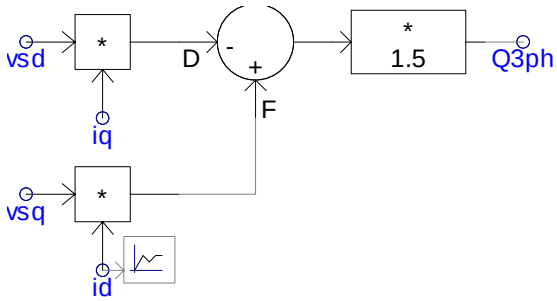

Closed loop control cases:

$$i_{d\_ref} = \frac{2}{3}\cdot\frac{P_{3ph}}{v_{sd}}$$

Correct in the files.

$$i_{q\_ref} = \frac{-2}{3}\cdot\frac{Q_{3ph}}{v_{sd}}$$

- Sign error in the simulation files. It cancels with the reactive powercalculation error, so the results look correct when you plot Q in the simulation results.

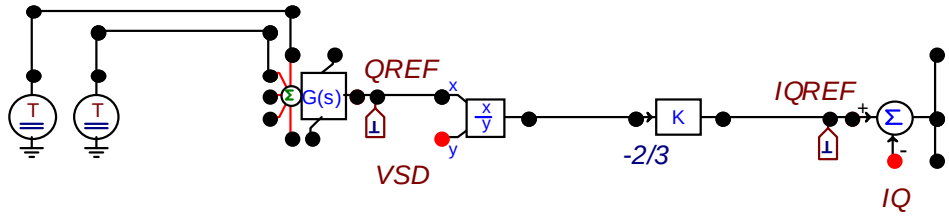

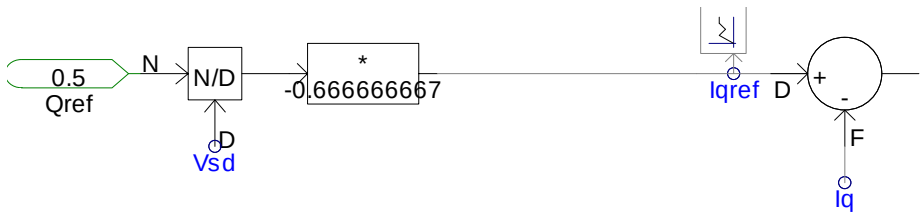

- Note, that the same error shows up in the alpha-beta based reactive power calculation example too:

$$P_{3ph} = \frac{3}{2}\left(v_{sd}\cdot i_d + v_{sq}\cdot i_q + v_0\cdot i_0\right)$$

  - This is implemented correctly in the files

$$Q_{3ph} = \frac{3}{2}\left(v_\beta\cdot i_\alpha - v_\alpha\cdot i_\beta\right)$$

  - The simulation files implement the negative of this.

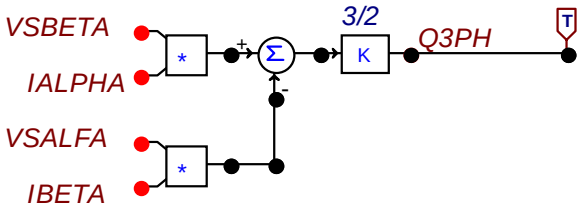

- Another frequent question:

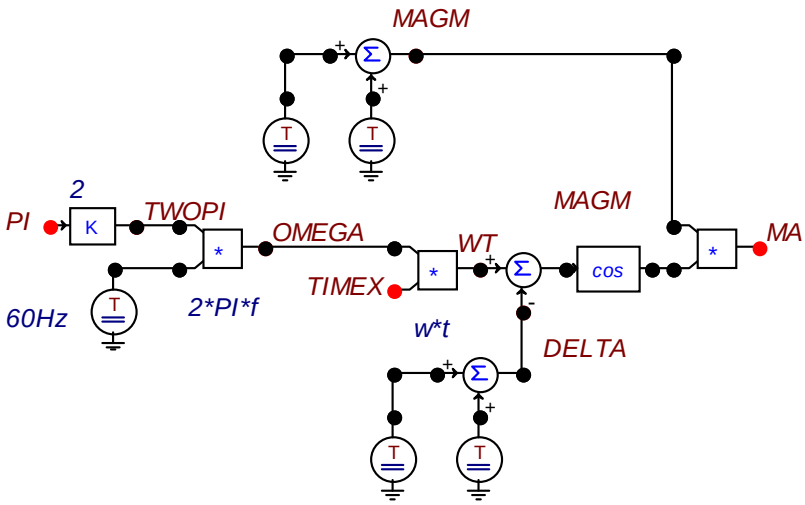

Note that this implements: $\text{MAGM}\cdot\cos(\omega\cdot t - \delta)$

While in EMTDC, I implemented it as:

$$\text{MAGM}\cdot\cos(\omega\cdot t + \delta)$$