Active Filtering and Reactive Power Control

Imitation Measured Currents:

Define array of time and define angular frequency:

$\Delta t := \frac{1}{128 \cdot 60Hz}$ $\Delta t = 1.302 \times 10^{-4} s$

$t := 0sec, \Delta t .. \frac{6}{60Hz}$ $\omega_0 := 2 \cdot \pi \cdot 60Hz$ $\omega(t) := \omega_0$

Load current as a function of time

$I_{mag} := 100A$ $I_{ampl} := \sqrt{2} \cdot I_{mag}$ $f := 60Hz$

- Sinusoidal harmonic terms for first 15 harmonics of a square wave (magnitude will be added later):

$f_{1A}(t) := \cos(2 \cdot \pi \cdot f \cdot t)$ $f_{3A}(t) := \cos(2 \cdot \pi \cdot 3 \cdot f \cdot t)$ $f_{5A}(t) := \cos(2 \cdot \pi \cdot 5 \cdot f \cdot t)$

$f_{7A}(t) := \cos(2 \cdot \pi \cdot 7 \cdot f \cdot t)$ $f_{9A}(t) := \cos(2 \cdot \pi \cdot 9 \cdot f \cdot t)$ $f_{11A}(t) := \cos(2 \cdot \pi \cdot 11 \cdot f \cdot t)$

$f_{13A}(t) := \cos(2 \cdot \pi \cdot 13 \cdot f \cdot t)$ $f_{15A}(t) := \cos(2 \cdot \pi \cdot 15 \cdot f \cdot t)$

- Harmonic amplitudes (assume three phase, thyristor rectifier with stiff dc current source, 3rd harmonic removed). Note the negative signs and 0's:
- Note since functions are cosines, the pattern of the signs changed

$a_1 := I_{ampl}$ $a_3 := 0$ $a_5 := \frac{-I_{ampl}}{5}$ $a_7 := \frac{I_{ampl}}{7}$ $a_9 := 0$ $a_{11} := \frac{-I_{ampl}}{11}$ $a_{13} := \frac{I_{ampl}}{13}$ $a_{15} := 0$

- Harmonic current equation:

$$i_{loadA}(t) := a_1 \cdot f_{1A}(t) + 1 \cdot \left(a_3 \cdot f_{3A}(t) + a_5 \cdot f_{5A}(t) + a_7 \cdot f_{7A}(t) + a_9 \cdot f_{9A}(t) + a_{11} \cdot f_{11A}(t) + a_{13} \cdot f_{13A}(t) + a_{15} \cdot f_{15A}(t) \right)$$

- Create 120 degree phase shift in units of time.

$$a_{time} := \left(\frac{120}{360} \right) \cdot \frac{1}{60Hz} \qquad a_{time} = 5.556 \times 10^{-3} \cdot s$$

$$i_{loadB}(t) := i_{loadA}\left(t - a_{time} \right)$$

$$i_{loadC}(t) := i_{loadA}\left(t + a_{time} \right)$$

Transform measured currents to the stationary dq0 ($\alpha\beta$) reference frame:

$$\theta r(t) := 2 \cdot \pi \cdot 60.0Hz \cdot t$$

- Use equations from the Clarke Transformation as equations instead of matrix for now

$$i_{ds}(t) := \frac{2}{3} \cdot \left(i_{loadA}(t) - 0.5 \cdot i_{loadB}(t) - 0.5 \cdot i_{loadC}(t) \right)$$

$$i_{qs}(t) := \frac{i_{loadB}(t) - i_{loadC}(t)}{\sqrt{3}}$$ Q axis 180 out of phase with some definitions

Park's Transformation in Matrix Form

$\theta(t) := \omega_0 \cdot t$ synchronously rotating reference frame, note that this is generally shifted by $\pi/2$ for rotating machines.

$$P(t) := \frac{2}{3}\cdot\begin{pmatrix} \frac{1}{2} & \frac{1}{2} & \frac{1}{2} \\ \cos(\theta(t)) & \cos\left(\theta(t)-\frac{2\cdot\pi}{3}\right) & \cos\left(\theta(t)+\frac{2\cdot\pi}{3}\right) \\ -\sin(\theta(t)) & -\sin\left(\theta(t)-\frac{2\cdot\pi}{3}\right) & -\sin\left(\theta(t)+\frac{2\pi}{3}\right) \end{pmatrix}$$

Clarke Transform on the Currents

$$I_{0\alpha\beta}(t) := P(0)\cdot\begin{pmatrix} i_{loadA}(t) \\ i_{loadB}(t) \\ i_{loadC}(t) \end{pmatrix}$$

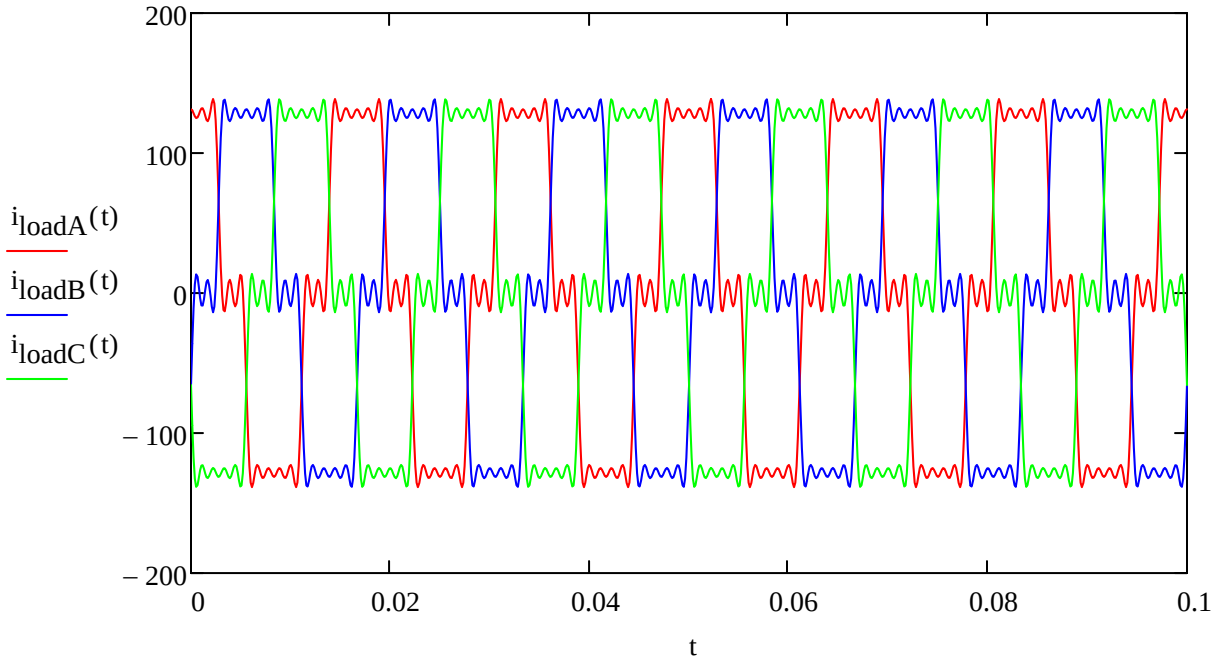

Transformed voltages (not that $i_{ds}(t)$ in phase with $i_a(t)$

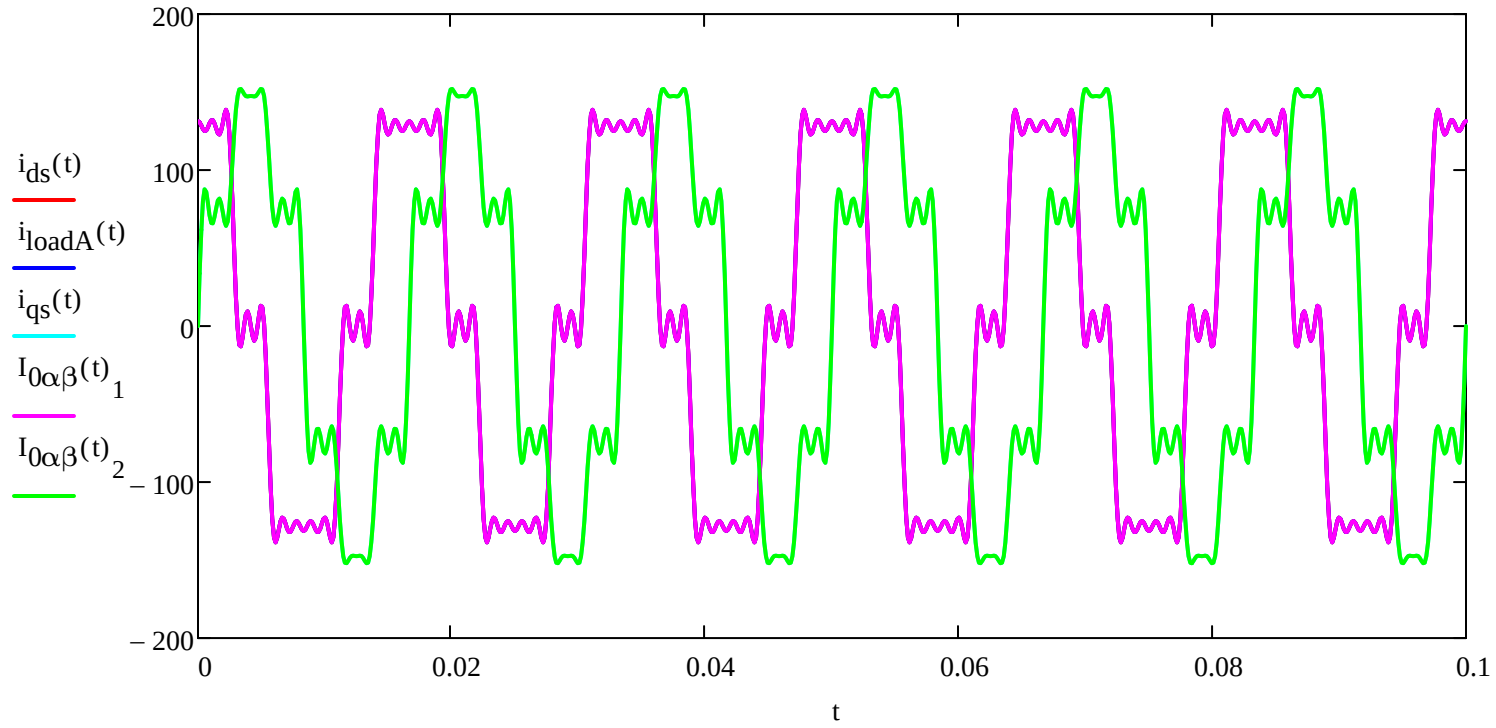

Voltage as a function of time

$V_{mag} := 15kV$ $\phi := 30deg$

$v_a(t) := \sqrt{2} \cdot V_{mag} \cdot \cos(\omega(t) \cdot t + \phi)$

$v_b(t) := \sqrt{2} \cdot V_{mag} \cdot \cos(\omega(t) \cdot t - 120deg + \phi)$

$v_c(t) := \sqrt{2} \cdot V_{mag} \cdot \cos(\omega(t) \cdot t + 120deg + \phi)$

- Clarke Transformation on Voltages

$$V_{0\alpha\beta}(t) := P(0)\cdot\begin{pmatrix} v_a(t) \\ v_b(t) \\ v_c(t) \end{pmatrix}$$

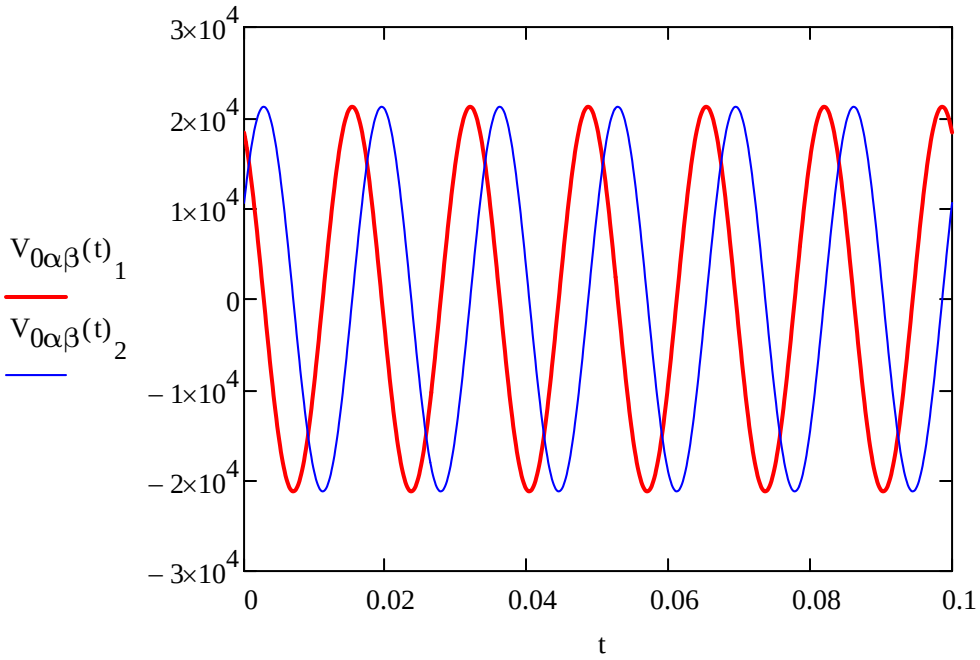

Now calculate instantaneous real and reactive power

MW := 1000kW MVA := MW MVAR := MW

- Phasor form first: $V_a := V_{mag} \cdot e^{j \cdot 30deg}$

$I_a := I_{mag} \cdot e^{j \cdot 0deg}$

$P_{3ph} := 3 \cdot Re\left(V_a \cdot \overline{I_a}\right)$ $\quad P_{3ph} = 3.897 \cdot MW$

$Q_{3ph} := 3 \cdot Im\left(V_a \cdot \overline{I_a}\right)$ $\quad Q_{3ph} = 2.25 \cdot MW$

- Note: we need the 3/2 term because of 2/3 constant in transformation matrix.
- This will differ if use SQRT(2/3)

$$P_{0\alpha\beta}(t) := \frac{3}{2}\left(V_{0\alpha\beta}(t)_0 \cdot I_{0\alpha\beta}(t)_0 + V_{0\alpha\beta}(t)_1 \cdot I_{0\alpha\beta}(t)_1 + V_{0\alpha\beta}(t)_2 \cdot I_{0\alpha\beta}(t)_2\right)$$

$$Q_{0\alpha\beta}(t) := \frac{3}{2}\left(V_{0\alpha\beta}(t)_2 \cdot I_{0\alpha\beta}(t)_1 - V_{0\alpha\beta}(t)_1 \cdot I_{0\alpha\beta}(t)_2\right)$$

$v_\alpha(t) := V_{0\alpha\beta}(t)_1$ $\quad i_\alpha(t) := I_{0\alpha\beta}(t)_1$

$v_\beta(t) := V_{0\alpha\beta}(t)_2$ $\quad i_\beta(t) := I_{0\alpha\beta}(t)_2$

$$PQ_{0\alpha\beta}(t) := \frac{3}{2} \cdot \begin{pmatrix} v_\alpha(t) & v_\beta(t) \\ v_\beta(t) & -v_\alpha(t) \end{pmatrix} \cdot \begin{pmatrix} i_\alpha(t) \\ i_\beta(t) \end{pmatrix}$$

$p(t) := PQ_{0\alpha\beta}(t)_0$ $\quad q(t) := PQ_{0\alpha\beta}(t)_1$

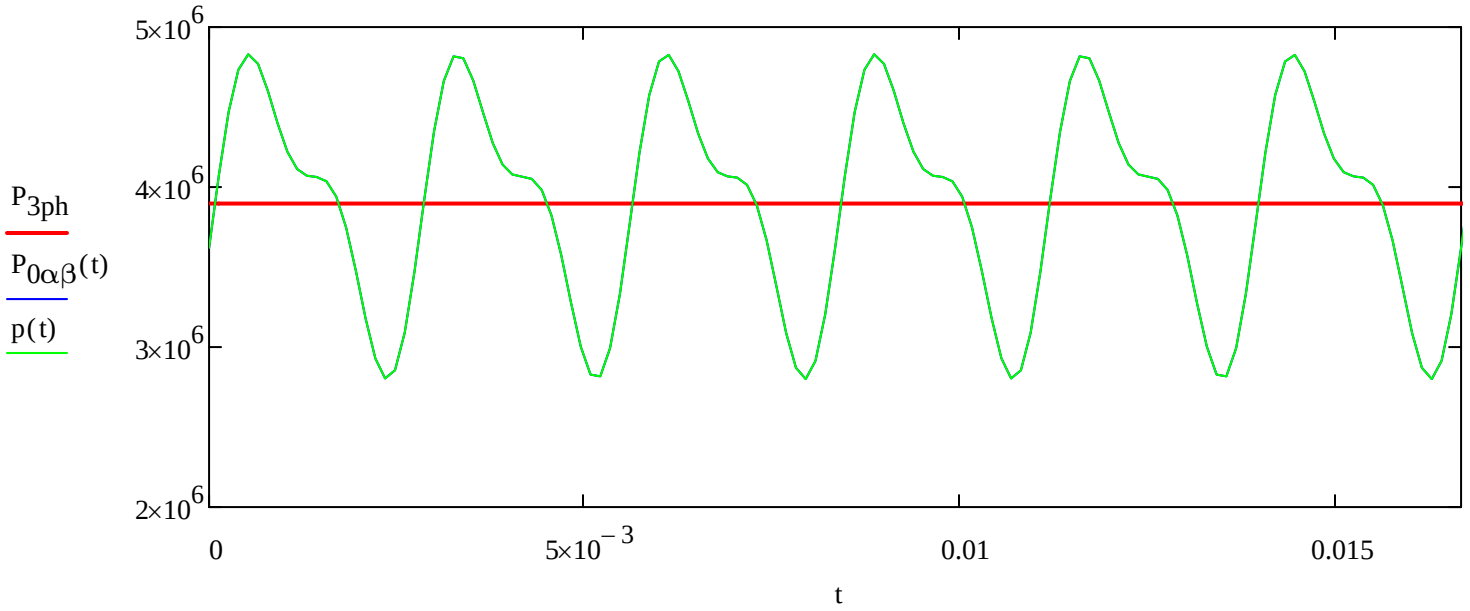
P_{3ph}
$P_{0\alpha\beta}(t)$
p(t)
5×10^{6}
4×10^{6}
3×10^{6}
2×10^{6}
0
5×10^{-3}
0.01
0.015
t

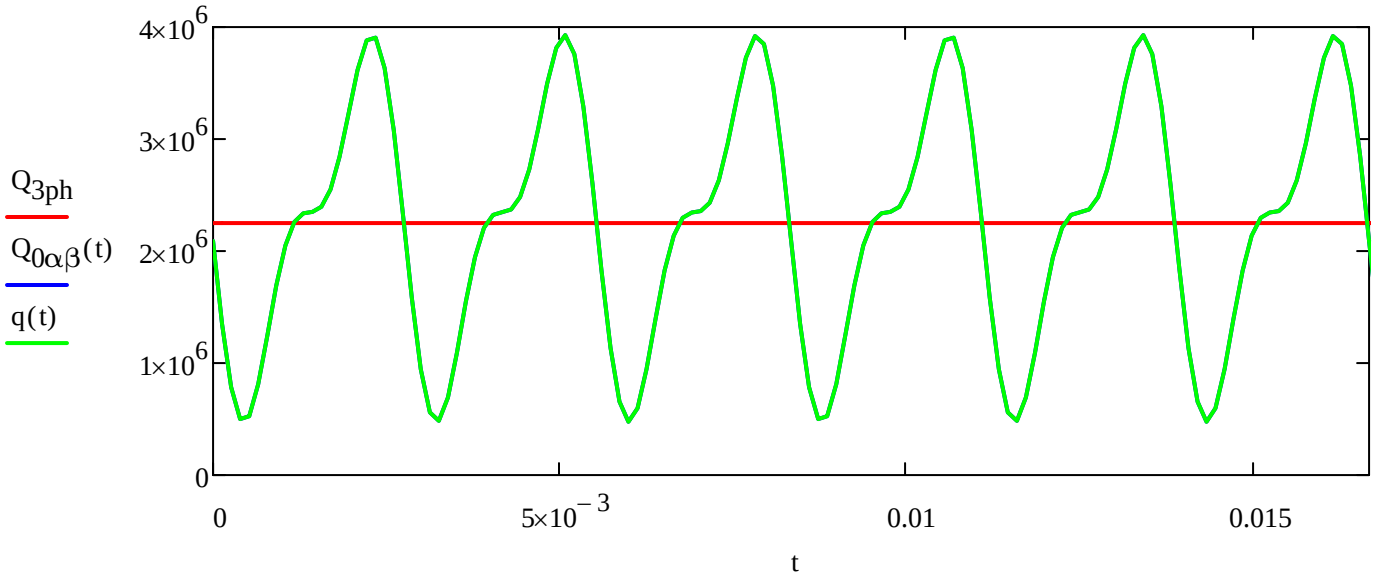

- In practice, the average real and reactor power from the phasor calculation won't be available. We we need some form of averaged o low pass filtered value.

  1. Half cycle averaged on the α,β results:

$$p_{\alpha\beta}(t) = \frac{60Hz}{0.5}\cdot\left(\int_0^{\frac{0.5}{60Hz}} p(t_a)\,dt_a\right) \qquad P_{\alpha\beta AVE}(t) = p_{\alpha\beta}(t) - p_{\alpha\beta}\left(t - \frac{0.5}{60\cdot Hz}\right)$$

$$q_{\alpha\beta}(t) = \frac{60Hz}{0.5}\cdot\left(\int_0^{t} q(t_a)\,dt_a\right) \qquad Q_{\alpha\beta AVE}(t) = q_{\alpha\beta}(t) - q_{\alpha\beta}\left(t - \frac{0.5}{60\cdot Hz}\right)$$

  2. Low pass, averaging digital filter

$RS := 128$

$$LP(t) = \sum_{k=0}^{\frac{RS}{2}-1} \frac{p\left[\left(k - \frac{RS}{2}\right)\cdot\Delta t\right]}{\frac{RS}{2}} \qquad LQ(t) = \sum_{k=0}^{\frac{RS}{2}-1} \frac{q\left[\left(k - \frac{RS}{2}\right)\cdot\Delta t\right]}{\frac{RS}{2}}$$

- For most of this example we will stick with just the 3 phase complex power phasor solutions.

- Compensator Currents:
  Case 1: Just correcting harmonics:

$$i_{comp\alpha\beta}(t) := \frac{\frac{2}{3}}{v_\alpha(t)^2 + v_\beta(t)^2}\cdot\begin{pmatrix} v_\alpha(t) & v_\beta(t) \\ v_\beta(t) & -v_\alpha(t) \end{pmatrix}\cdot\begin{pmatrix} p(t) - P_{3ph} \\ q(t) - Q_{3ph} \end{pmatrix}$$

$$i_{comp\alpha}(t) := i_{comp\alpha\beta}(t)_0$$

$$i_{comp\beta}(t) := i_{comp\alpha\beta}(t)_1$$

- By subtracing average P and Q, the error signal for the control group is just the harmonic distortion in "instantaneous P and Q"

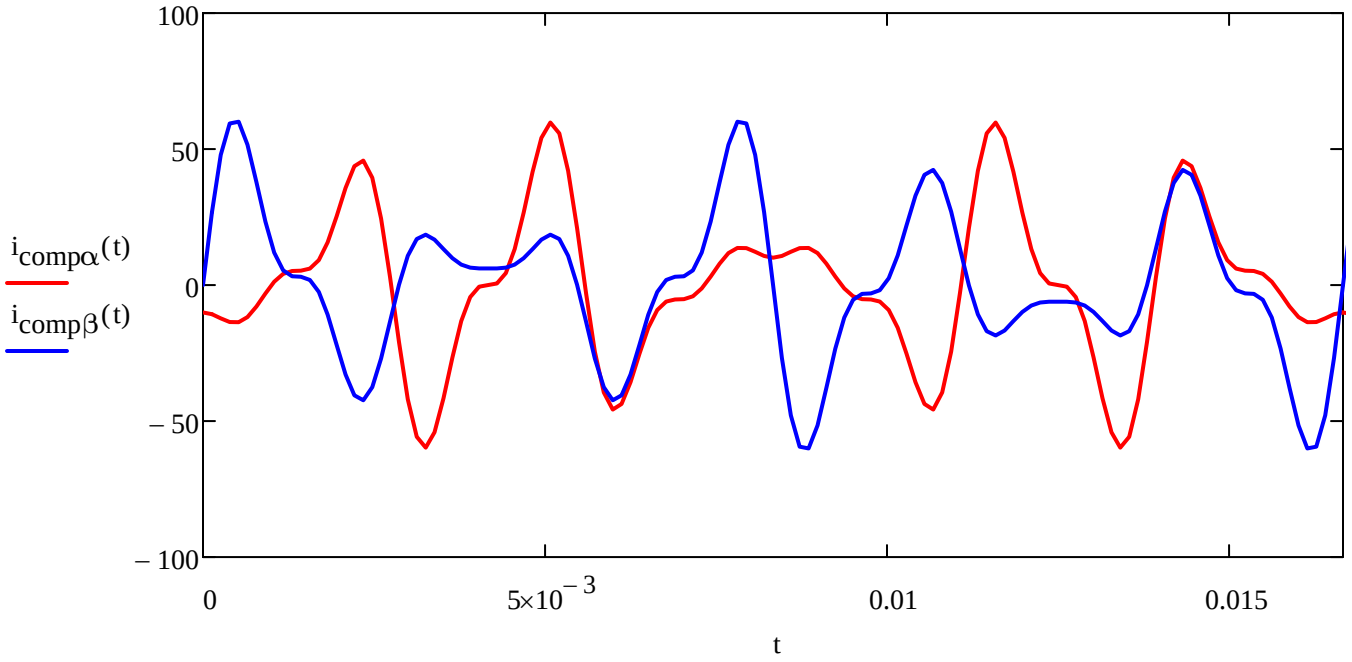

$$I_{compABC}(t) := P(0)^{-1} \cdot \begin{pmatrix} 0A \\ i_{comp\alpha}(t) \\ i_{comp\beta}(t) \end{pmatrix}$$

Note that the zero sequence part of the compensator current is assumed to be zero. This is due to the assumption that the compensator is a 3 wire device (note that a VSC is inherently ungrounded, so the converter topology needs to change to add a ground return and the ability to compensate zero sequence terms.

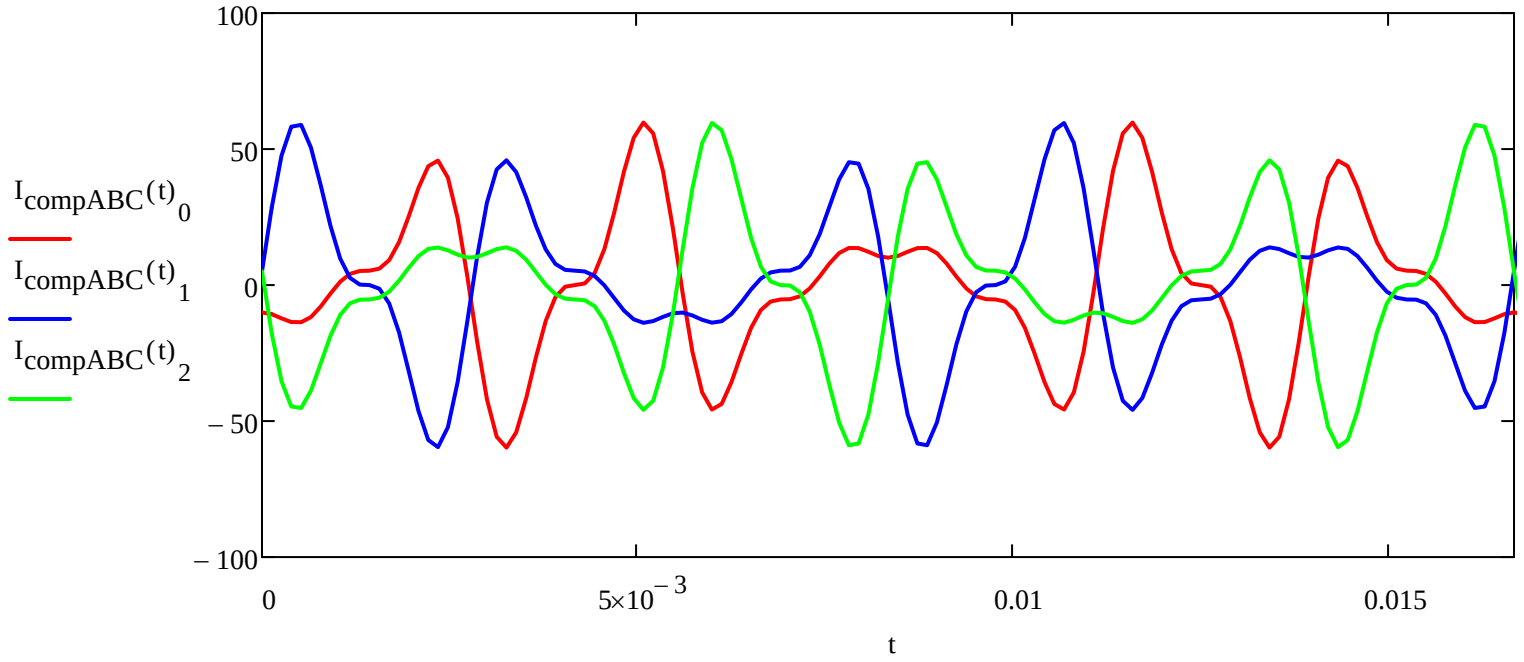

Now find the compensated currents:

$$i_{sourceA}(t) := i_{loadA}(t) - I_{compABC}(t)_0$$

$$i_{sourceB}(t) := i_{loadB}(t) - I_{compABC}(t)_1$$

$$i_{sourceC}(t) := i_{loadC}(t) - I_{compABC}(t)_2$$

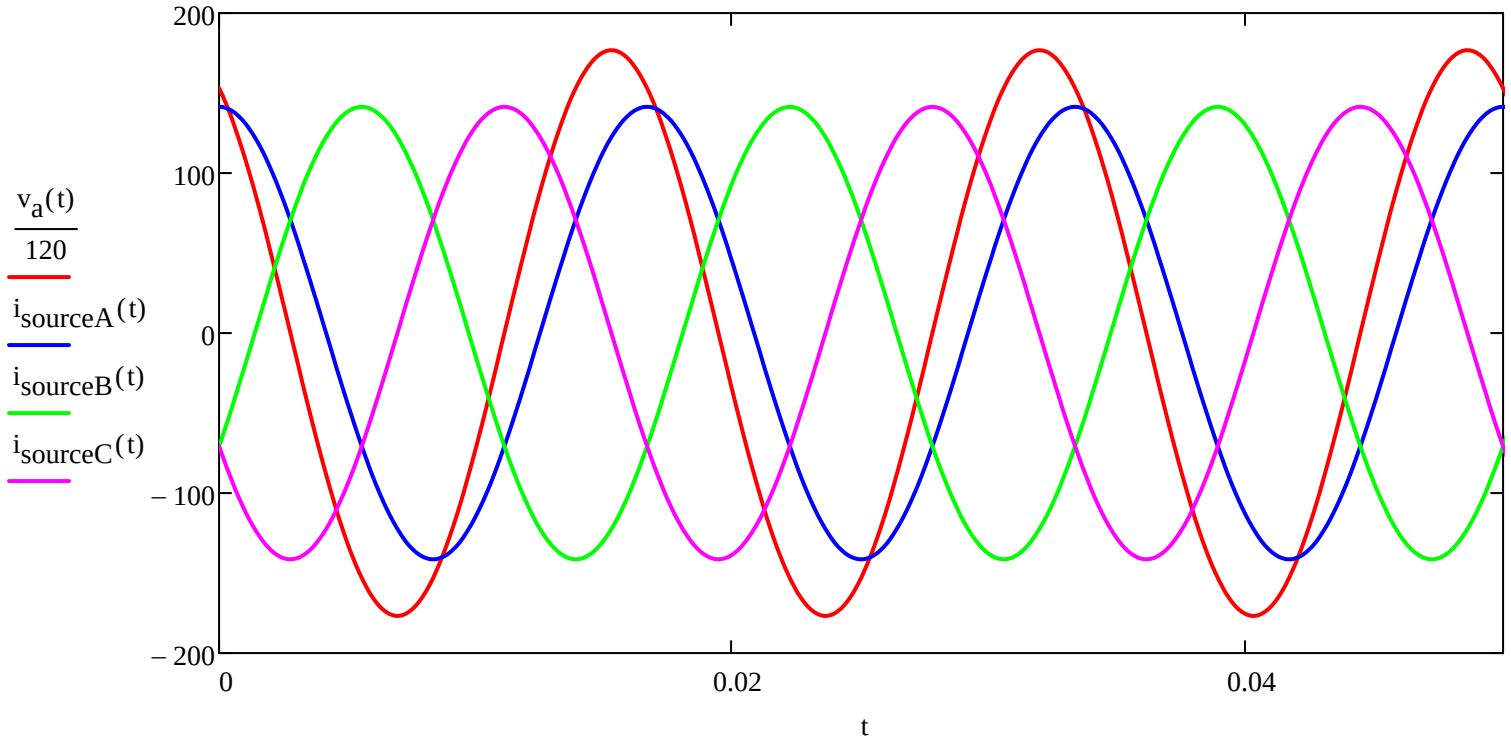

- Note that $v_a(t)$ and $i_a(t)$ are not in phase

Case 2: This time perform PF correction and harmonic compensation

$$i_{comp\alpha\beta}(t) := \frac{\frac{2}{3}}{v_\alpha(t)^2 + v_\beta(t)^2} \cdot \begin{pmatrix} v_\alpha(t) & v_\beta(t) \\ v_\beta(t) & -v_\alpha(t) \end{pmatrix} \cdot \begin{pmatrix} p(t) - P_{3ph} \\ q(t) \end{pmatrix}$$

$$i_{comp\alpha}(t) := i_{comp\alpha\beta}(t)_0$$

$$i_{comp\beta}(t) := i_{comp\alpha\beta}(t)_1$$

- By subtracing average P, but not average Q, the error signal for the control group is both the harmonic distortion in "instantaneous P and Q" and bringing the total reactive power to zero.

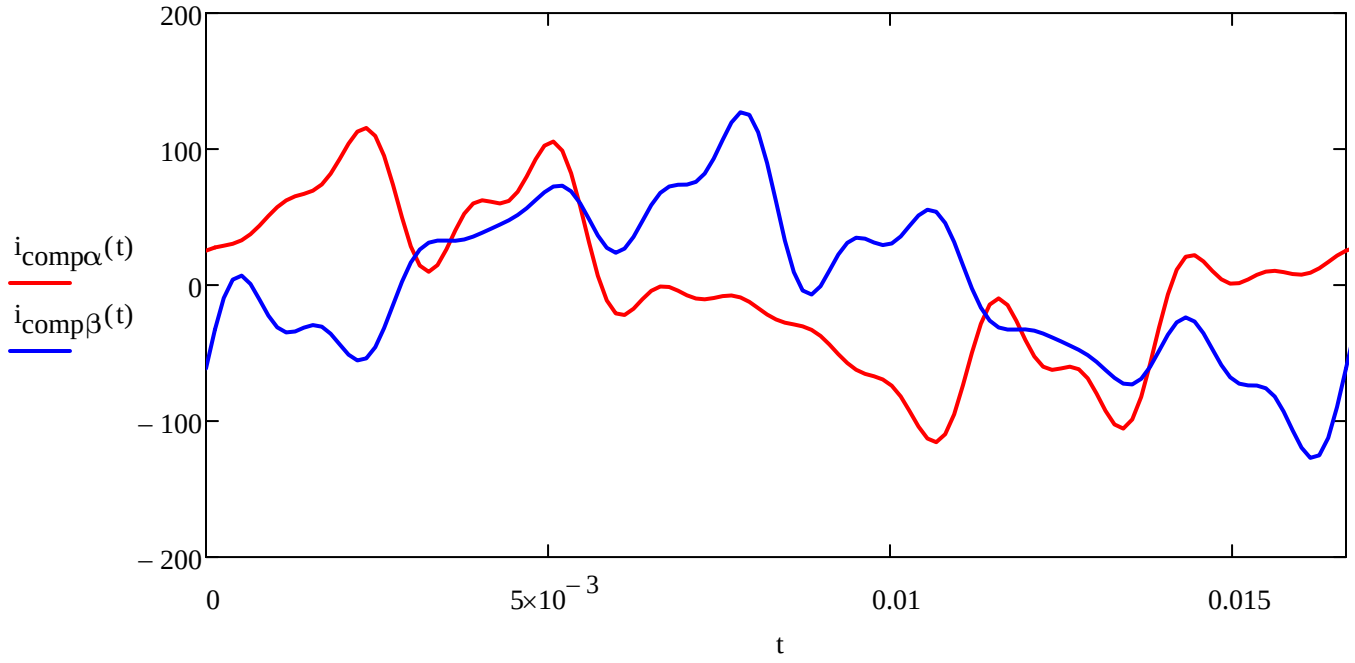

$$I_{compABC}(t) := P(0)^{-1} \cdot \begin{pmatrix} 0A \\ i_{comp\alpha}(t) \\ i_{comp\beta}(t) \end{pmatrix}$$

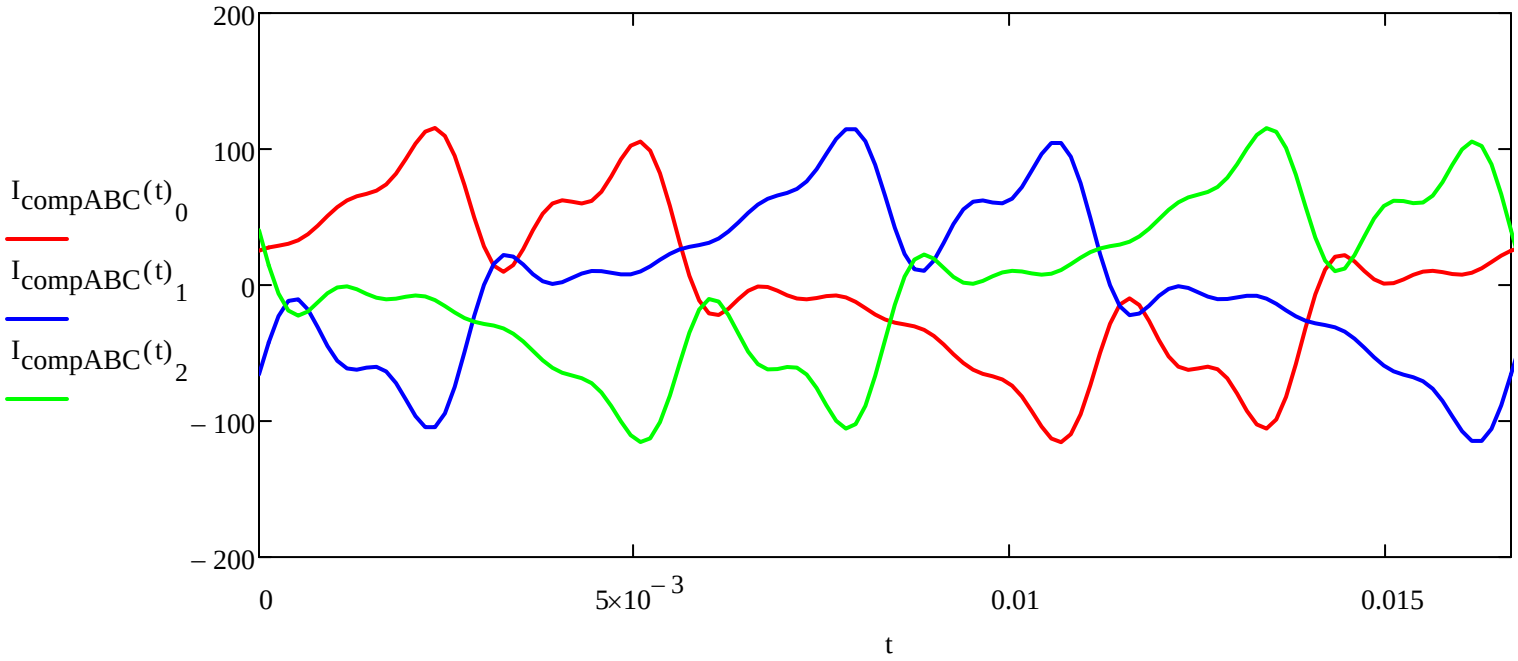

Now find the compensated currents:

$$i_{sourceA}(t) := i_{loadA}(t) - I_{compABC}(t)_0$$

$$i_{sourceB}(t) := i_{loadB}(t) - I_{compABC}(t)_1$$

$$i_{sourceC}(t) := i_{loadC}(t) - I_{compABC}(t)_2$$

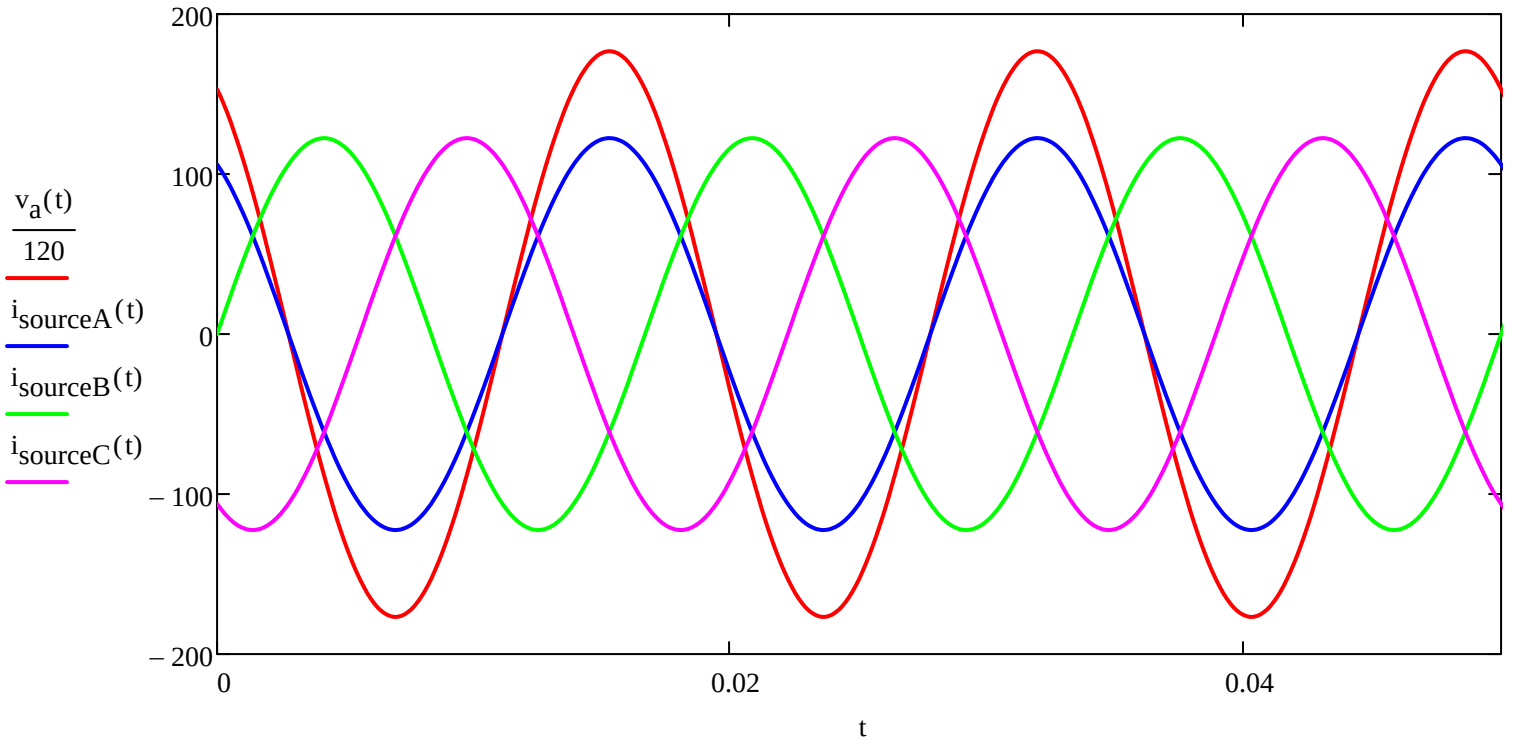

Note that $v_a(t)$ and $i_a(t)$ are in phase now. Unity power factor.

Case 3: PF correction, load balancing and harmonics:

- Keep the same phase A load current and maintain the same voltages across the load as above.

$i_{loadB}(t) := -i_{loadA}\left(t - 0 \cdot a_{time}\right)$

$i_{loadC}(t) := 0A$

- Effectively only have a load connected from phase A to phase B

$$I_{0\alpha\beta}(t) := P(0)\cdot\begin{pmatrix} i_{loadA}(t) \\ i_{loadB}(t) \\ i_{loadC}(t) \end{pmatrix}$$

$v_\alpha(t) := V_{0\alpha\beta}(t)_1$ $\quad i_\alpha(t) := I_{0\alpha\beta}(t)_1$ $\quad i_0(t) := I_{0\alpha\beta}(t)_0$

$v_\beta(t) := V_{0\alpha\beta}(t)_2$ $\quad i_\beta(t) := I_{0\alpha\beta}(t)_2$

$$PQ_{0\alpha\beta}(t) := \frac{3}{2}\begin{pmatrix} v_\alpha(t) & v_\beta(t) \\ v_\beta(t) & -v_\alpha(t) \end{pmatrix}\cdot\begin{pmatrix} i_\alpha(t) \\ i_\beta(t) \end{pmatrix}$$

$p(t) := PQ_{0\alpha\beta}(t)_0$ $\quad q(t) := PQ_{0\alpha\beta}(t)_1$

- Now we need to calculate average power

$RS := 128$

$$LP(t) := \left[\sum_{k=0}^{\frac{RS}{2}-1} \frac{p\left[\left(k - \frac{RS}{2}\right)\cdot\Delta t\right]}{\frac{RS}{2}} \right]$$

$$i_{comp\alpha\beta}(t) := \frac{\frac{2}{3}}{v_\alpha(t)^2 + v_\beta(t)^2} \cdot \begin{pmatrix} v_\alpha(t) & v_\beta(t) \\ v_\beta(t) & -v_\alpha(t) \end{pmatrix} \cdot \begin{pmatrix} p(t) - LP(t) \\ q(t) \end{pmatrix}$$

$$i_{comp\alpha}(t) := i_{comp\alpha\beta}(t)_0$$

$$i_{comp\beta}(t) := i_{comp\alpha\beta}(t)_1$$

- By subtracing average P, but not average Q, the error signal for the control group is both the harmonic distortion in "instantaneous P and Q" and bringing the total reactive power to zero.
- The negative sequence current associated with the unbalance also produces oscillations in p(t) and q(t). The control algorithm brings the oscillating term to zero. Effectively balancing the phase currents.

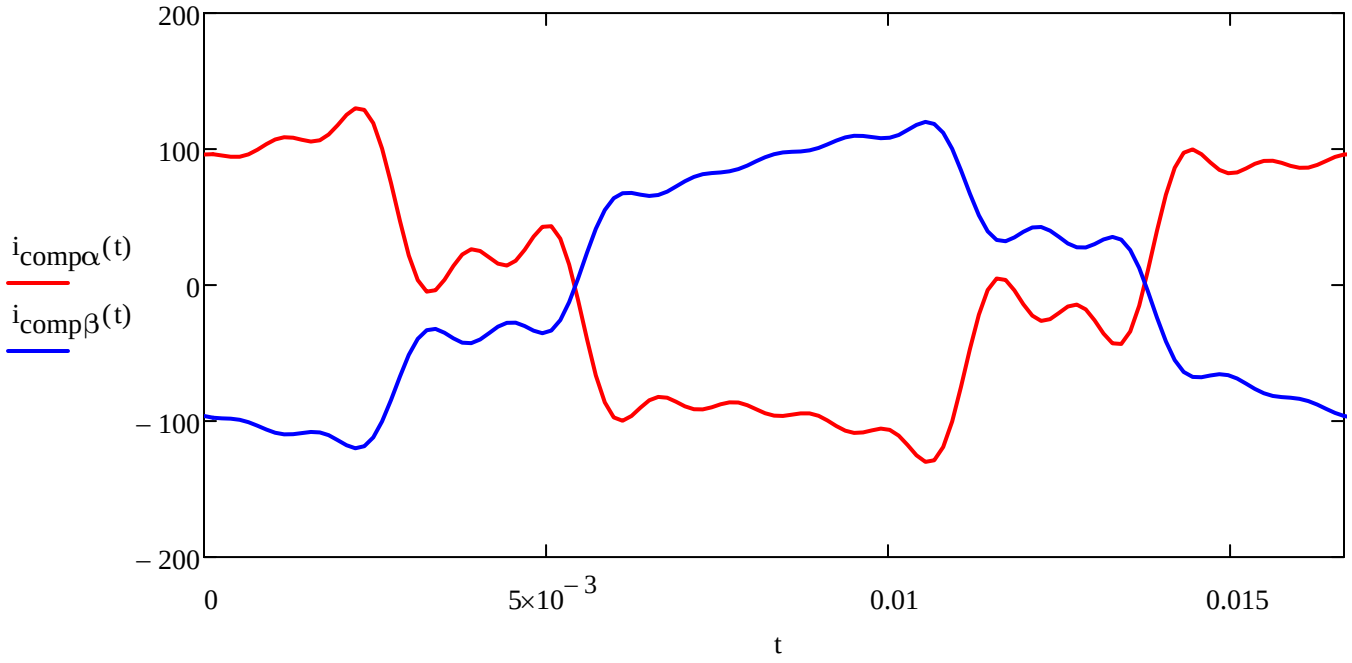

$$I_{compABC}(t) := P(0)^{-1} \cdot \begin{pmatrix} 0A \\ i_{comp\alpha}(t) \\ i_{comp\beta}(t) \end{pmatrix}$$

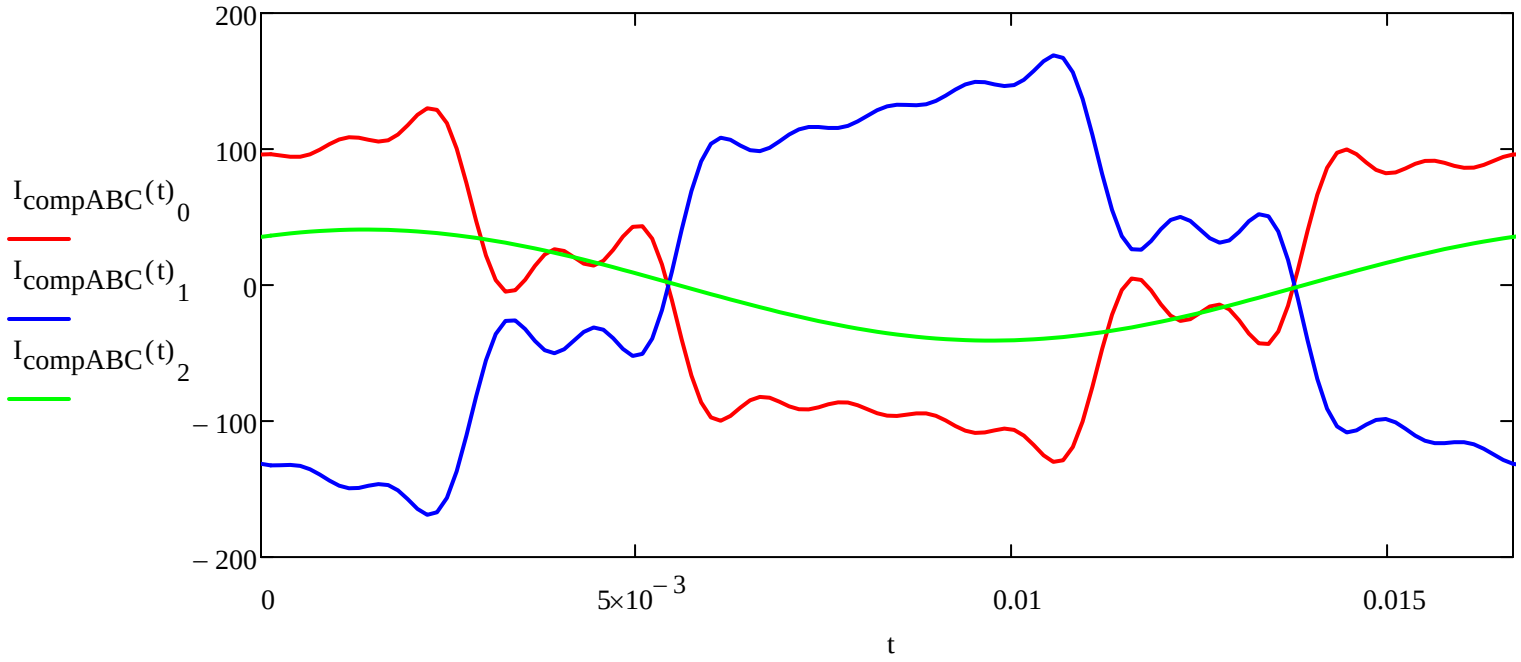

Now find the compensated currents:

$$i_{sourceA}(t) := i_{loadA}(t) - I_{compABC}(t)_0$$

$$i_{sourceB}(t) := i_{loadB}(t) - I_{compABC}(t)_1$$

$$i_{sourceC}(t) := i_{loadC}(t) - I_{compABC}(t)_2$$

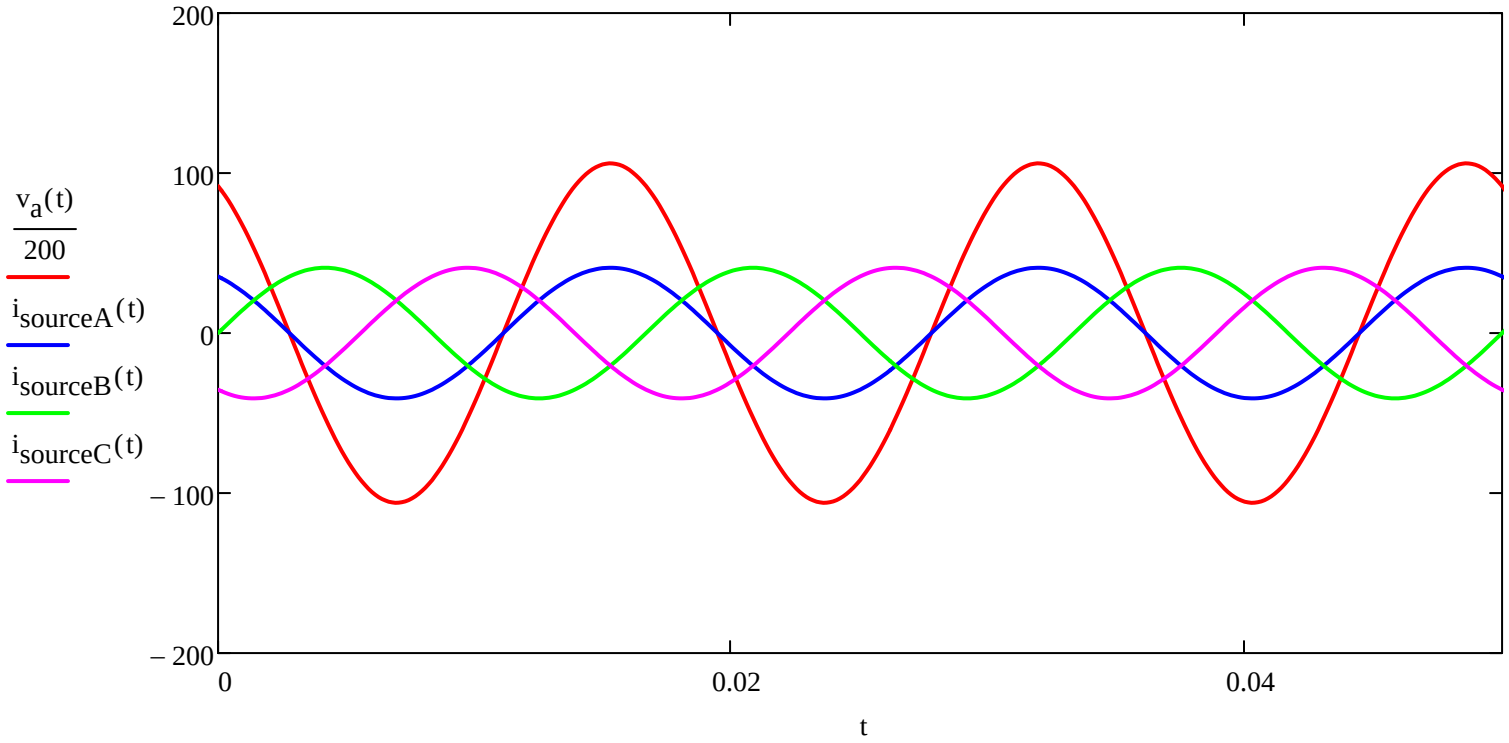

Note that currents are balanced, $v_a(t)$ and $i_a(t)$ are in phase now. Unity power factor.

- Power system:

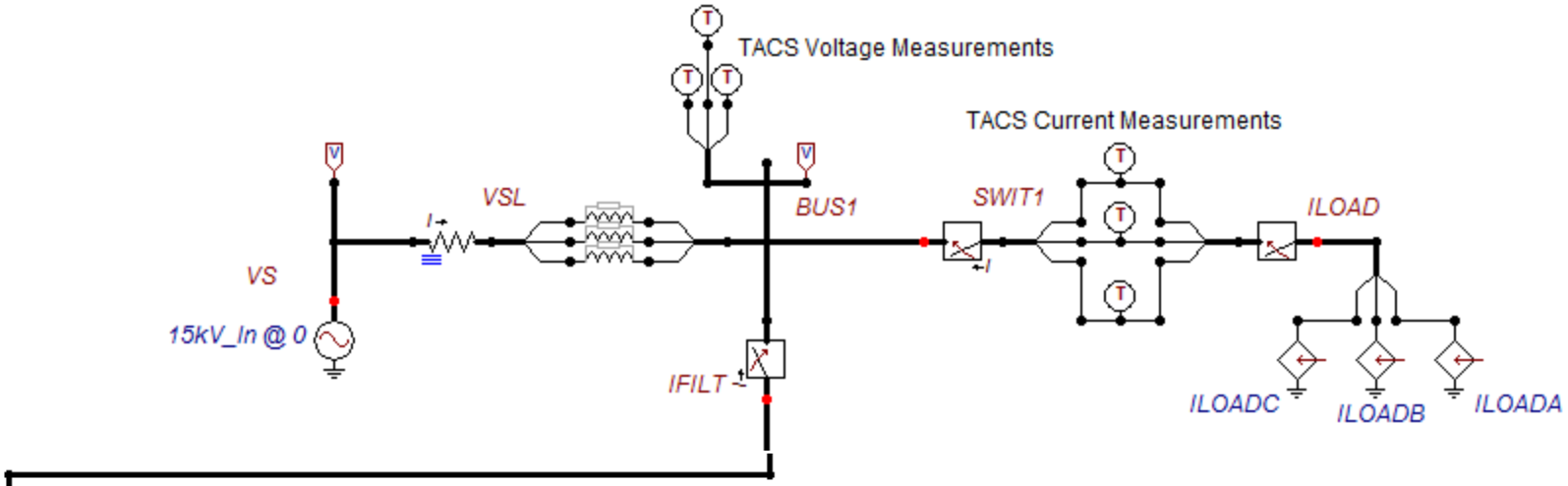

- VSC

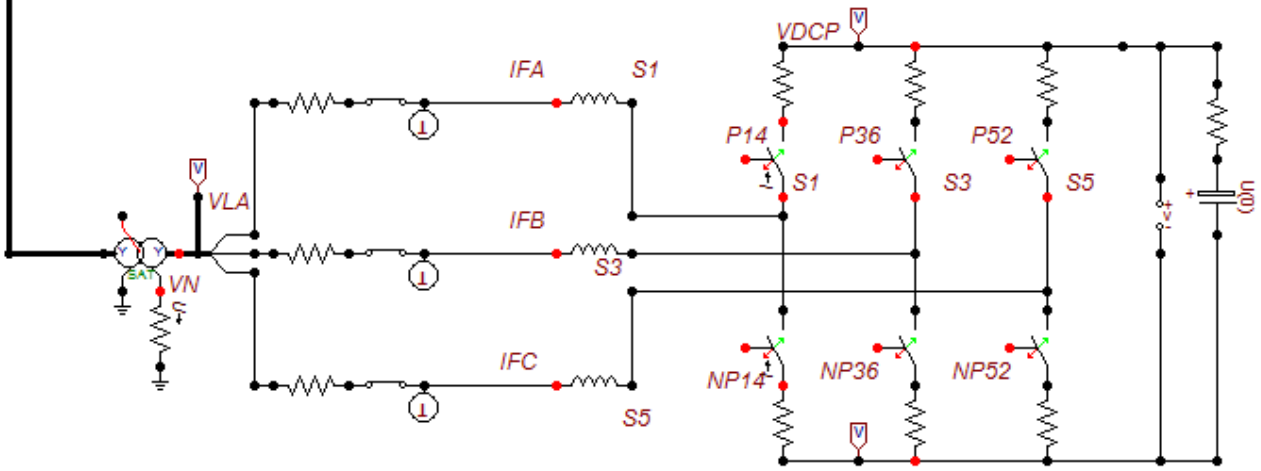

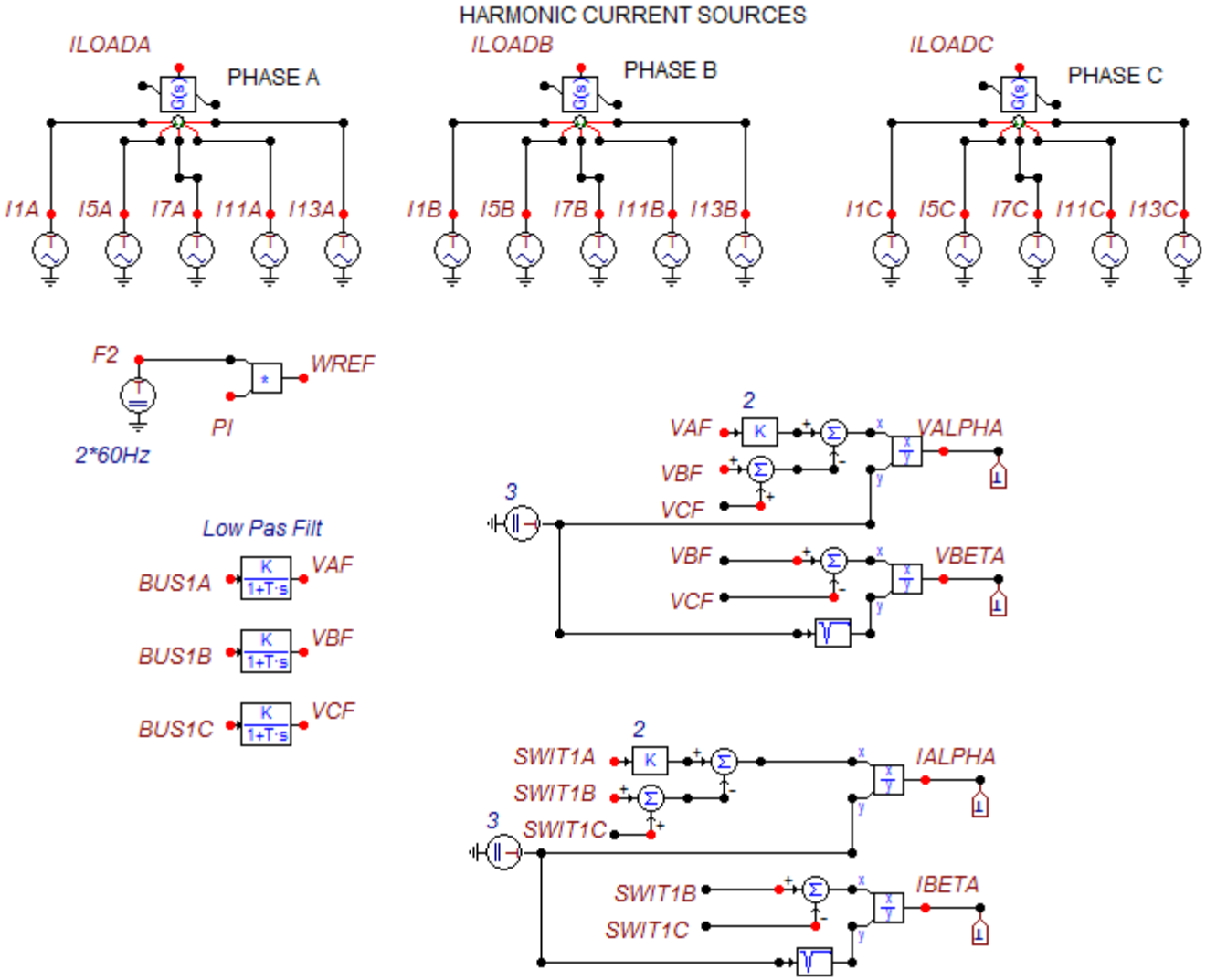
HARMONIC CURRENT SOURCES
ILOADA
PHASE A
I1A
I5A
I7A
I11A
I13A
ILOADB
PHASE B
I1B
I5B
I7B
I11B
I13B
ILOADC
PHASE C
I1C
I5C
I7C
I11C
I13C
F2
WREF
PI
2*60Hz
Low Pas Filt
BUS1A
VAF
BUS1B
VBF
BUS1C
VCF
2
3
VAF
VBF
VCF
VALPHA
VBF
VCF
VBETA
2
3
SWIT1A
SWIT1B
SWIT1C
IALPHA
SWIT1B
SWIT1C
IBETA

INSTANTANEOUS REAL AND REACTIVE POWER

Low Pass Filter on P,Q

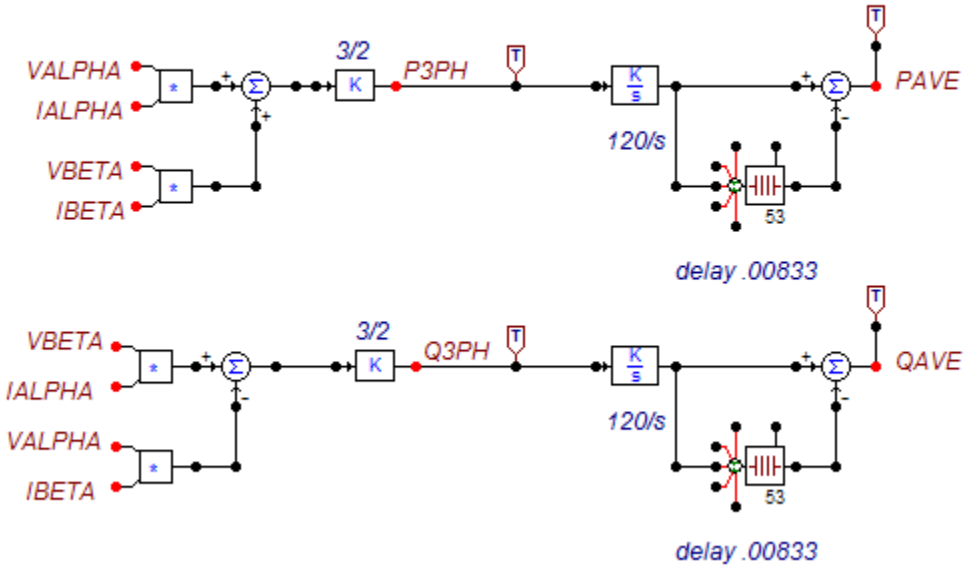

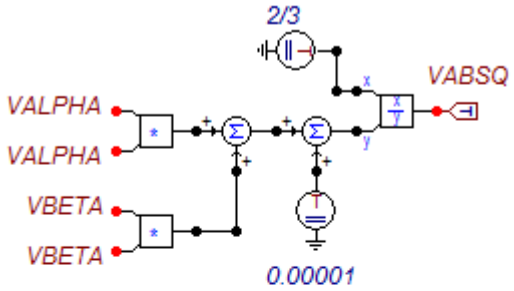

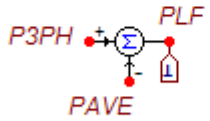

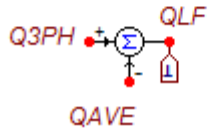

Compensator Currents In Alpha-Beta Frame

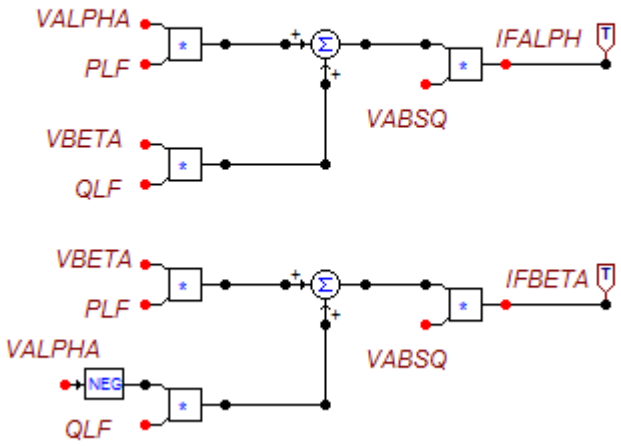

Transform Filter Currents to ABC Frame

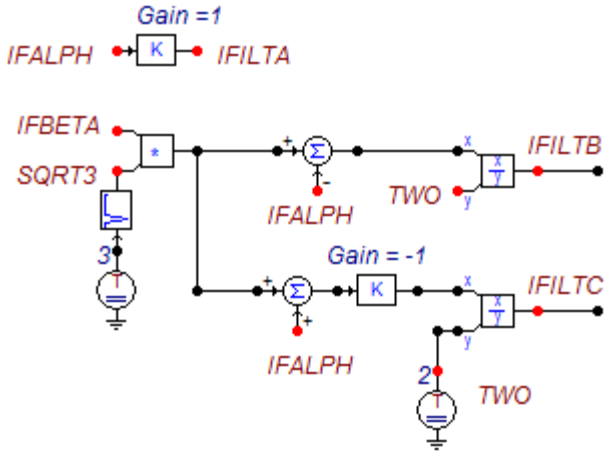

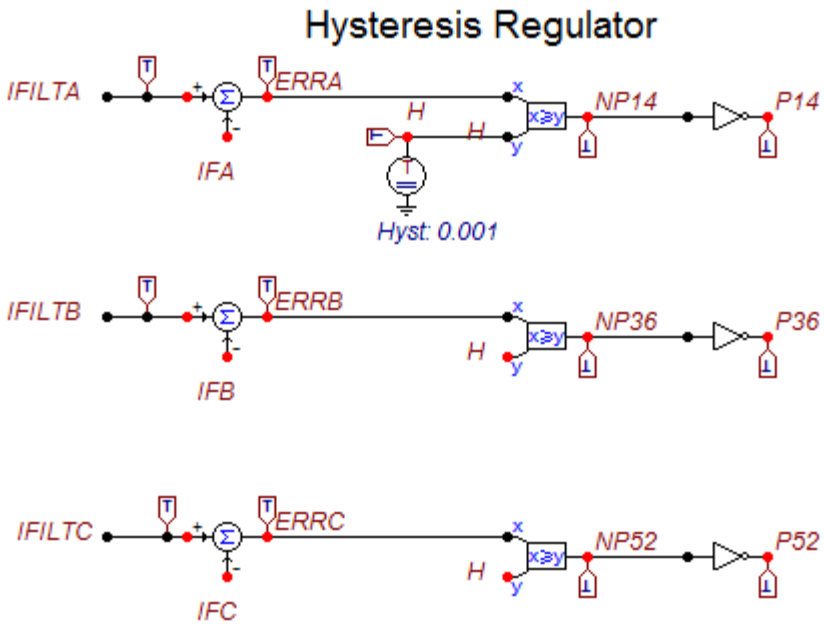
Hysteresis Regulator
IFILTA
ERRA
IFA
H
H
NP14
P14
Hyst: 0.001
IFILTB
ERRB
IFB
H
NP36
P36
IFILTC
ERRC
IFC
H
NP52
P52

Case 1: Harmonic compensation

Phase A load current

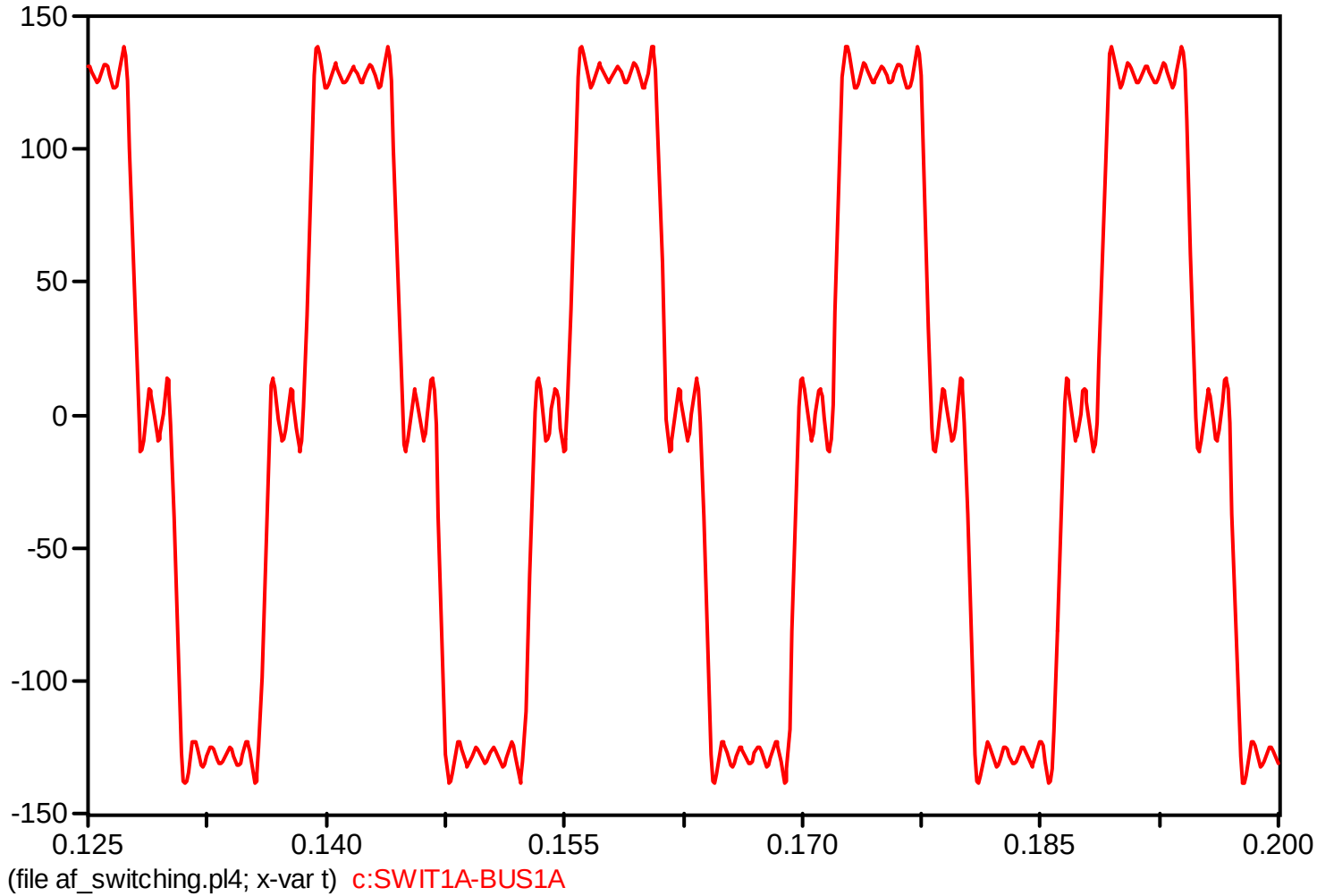

Compensator current

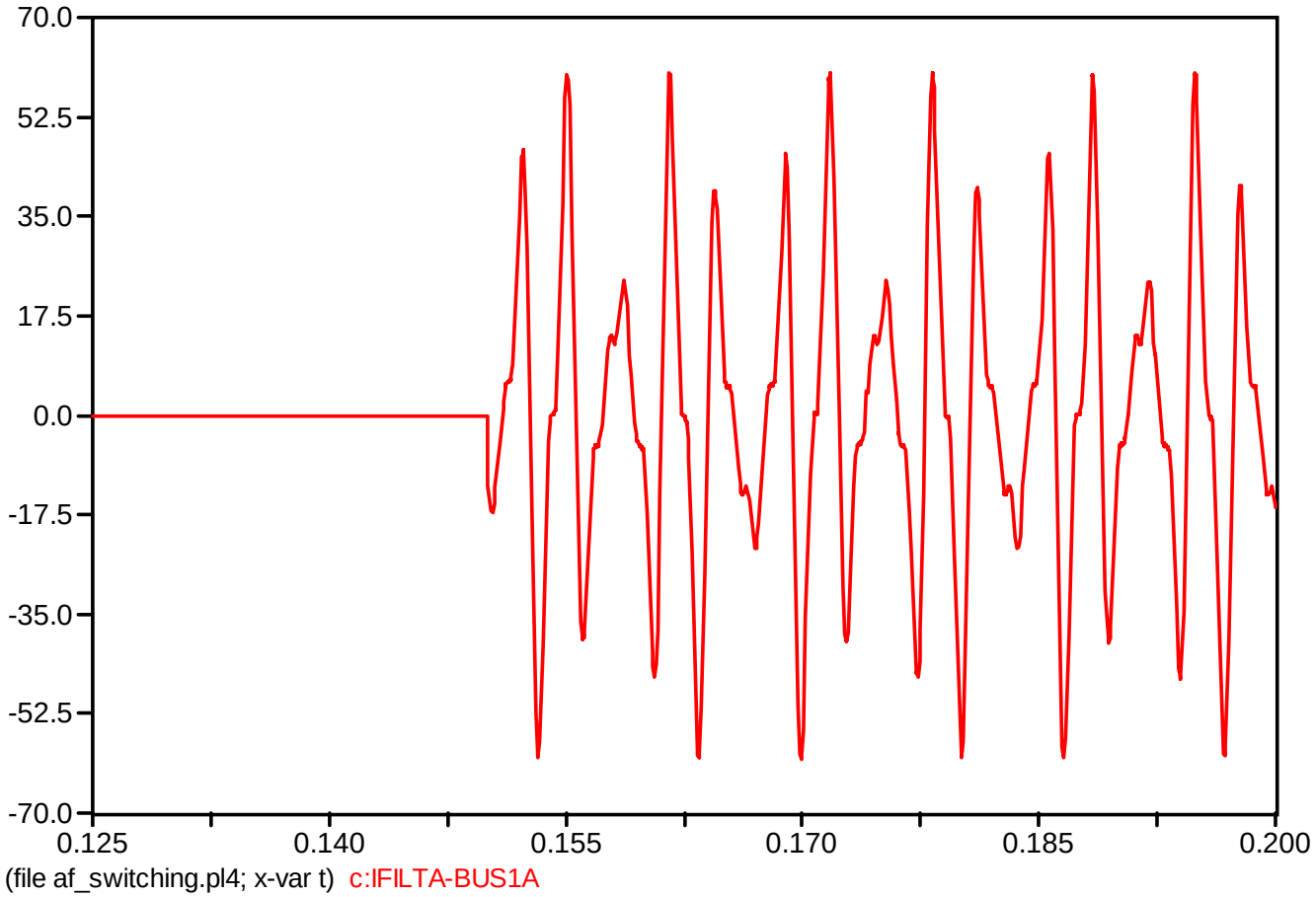

Commanded current and filter current

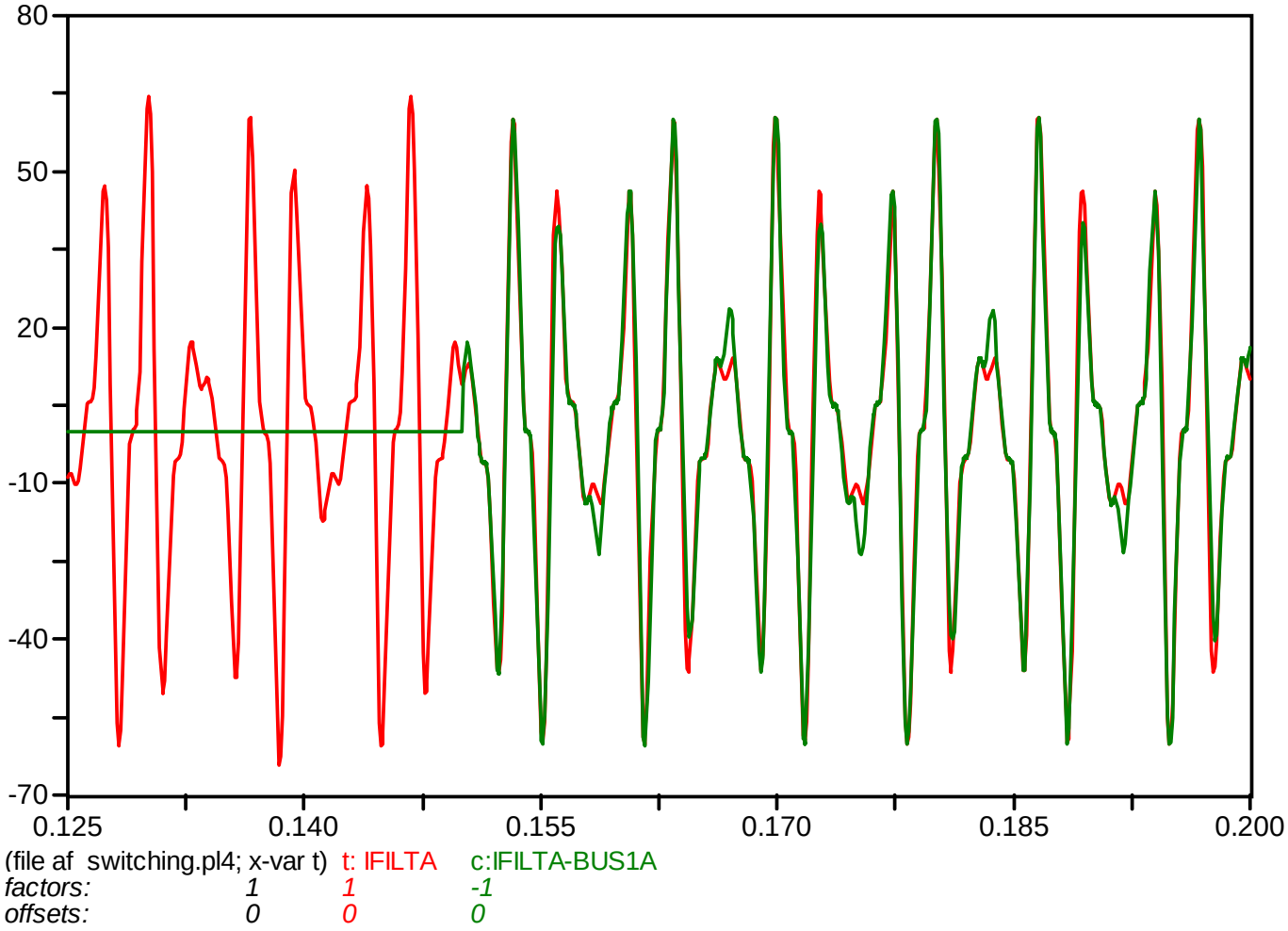

P and Q at the load

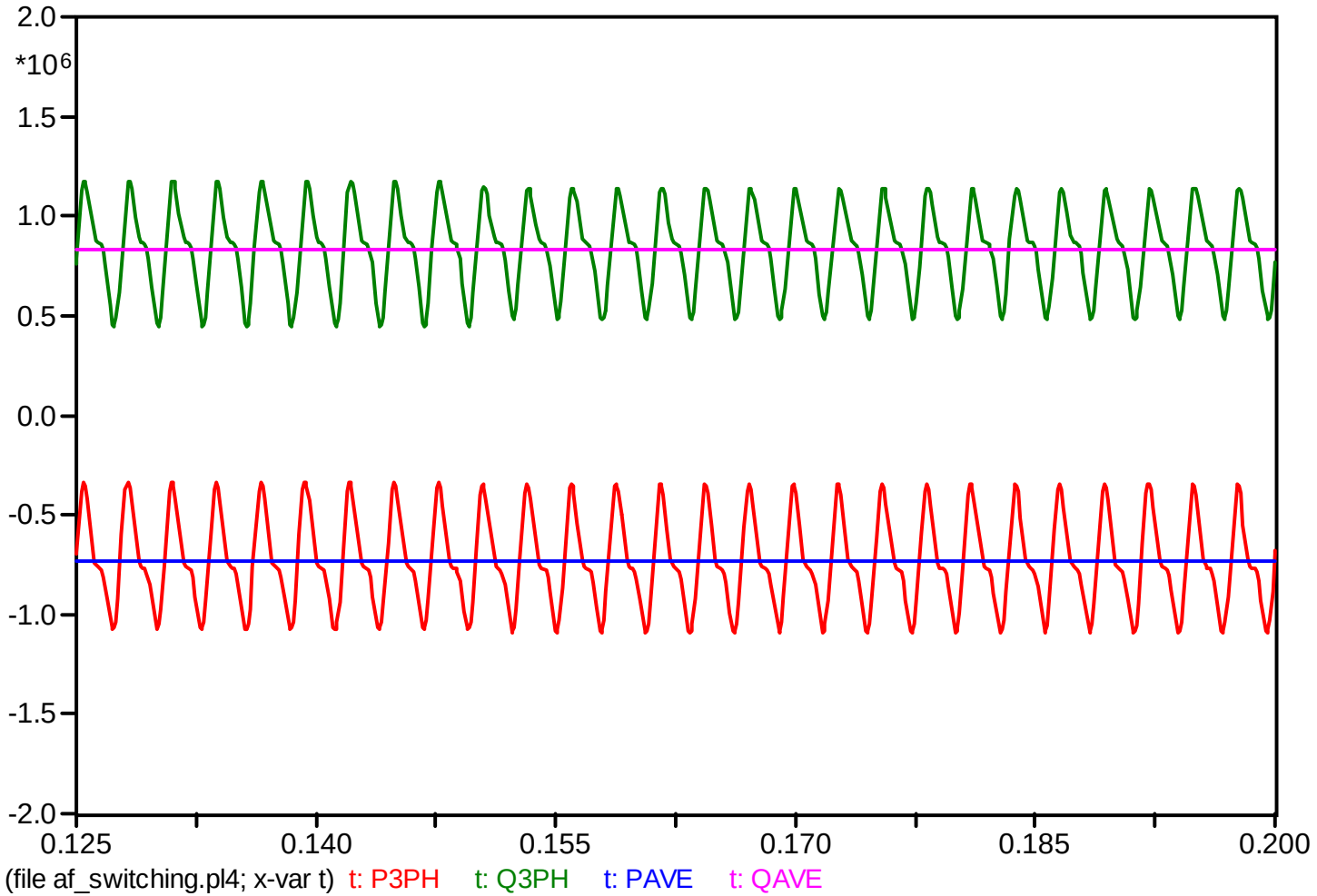

Filtered Current and phase A voltage

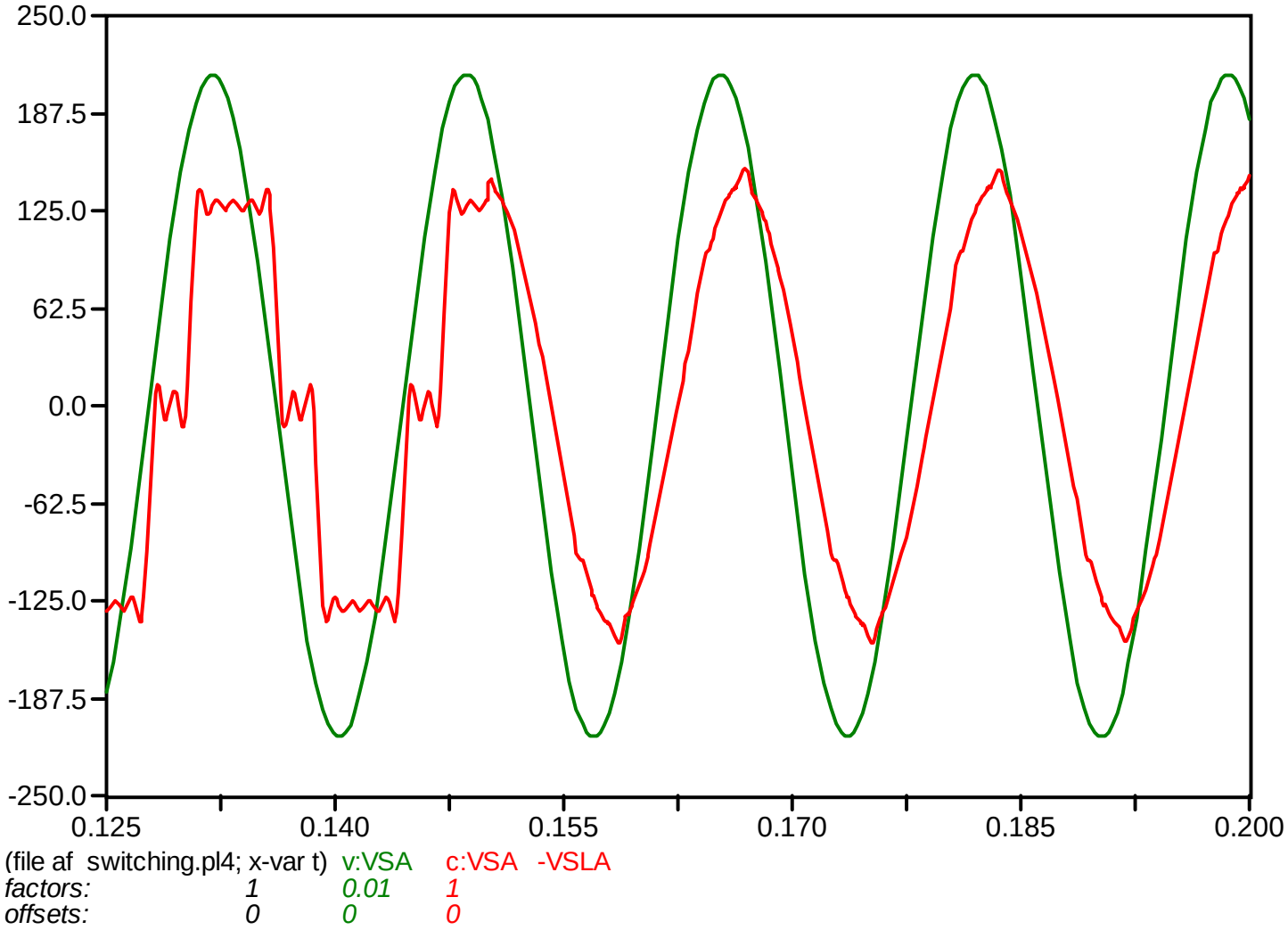

Repeat with wider hysteresis band

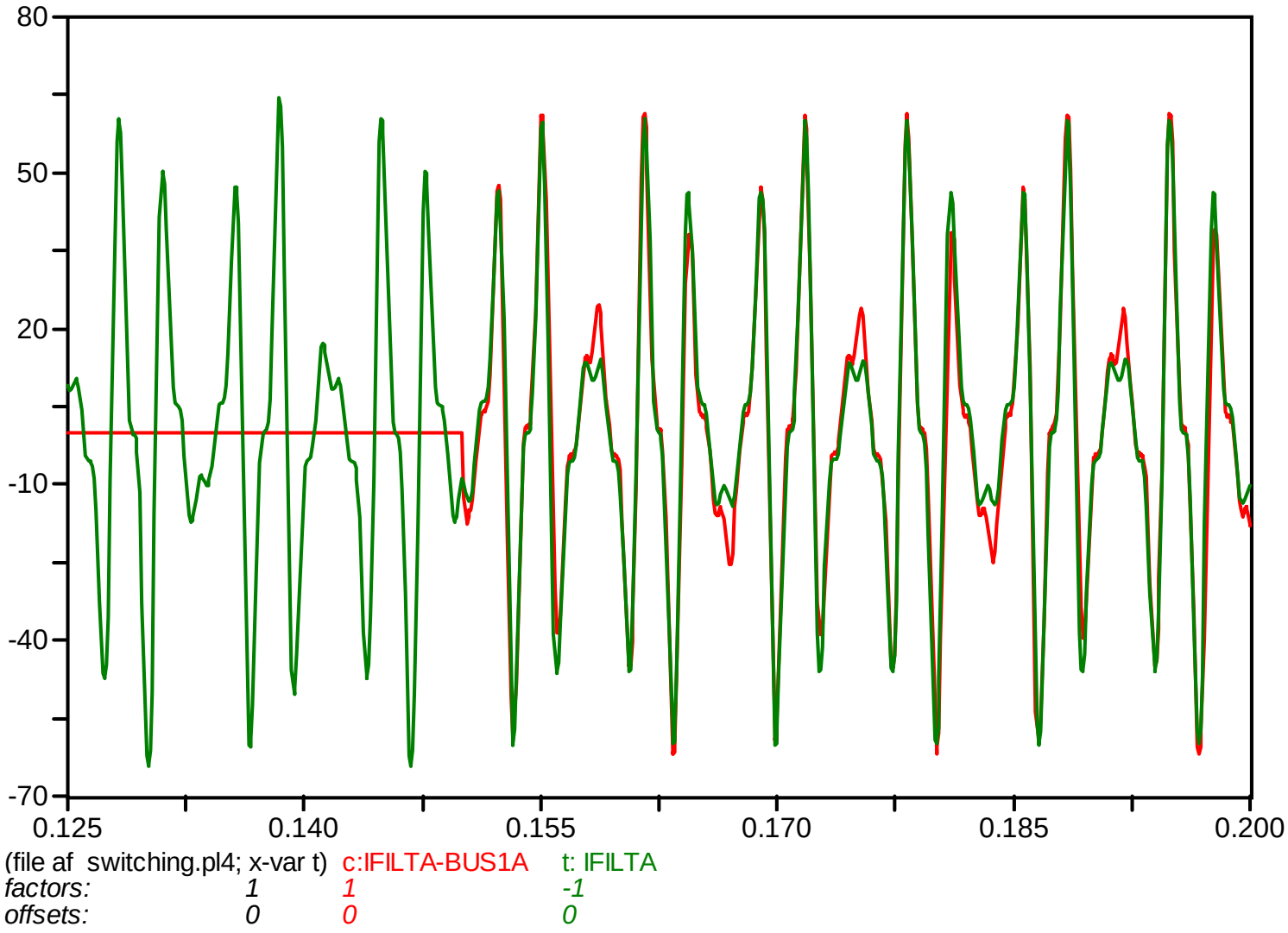

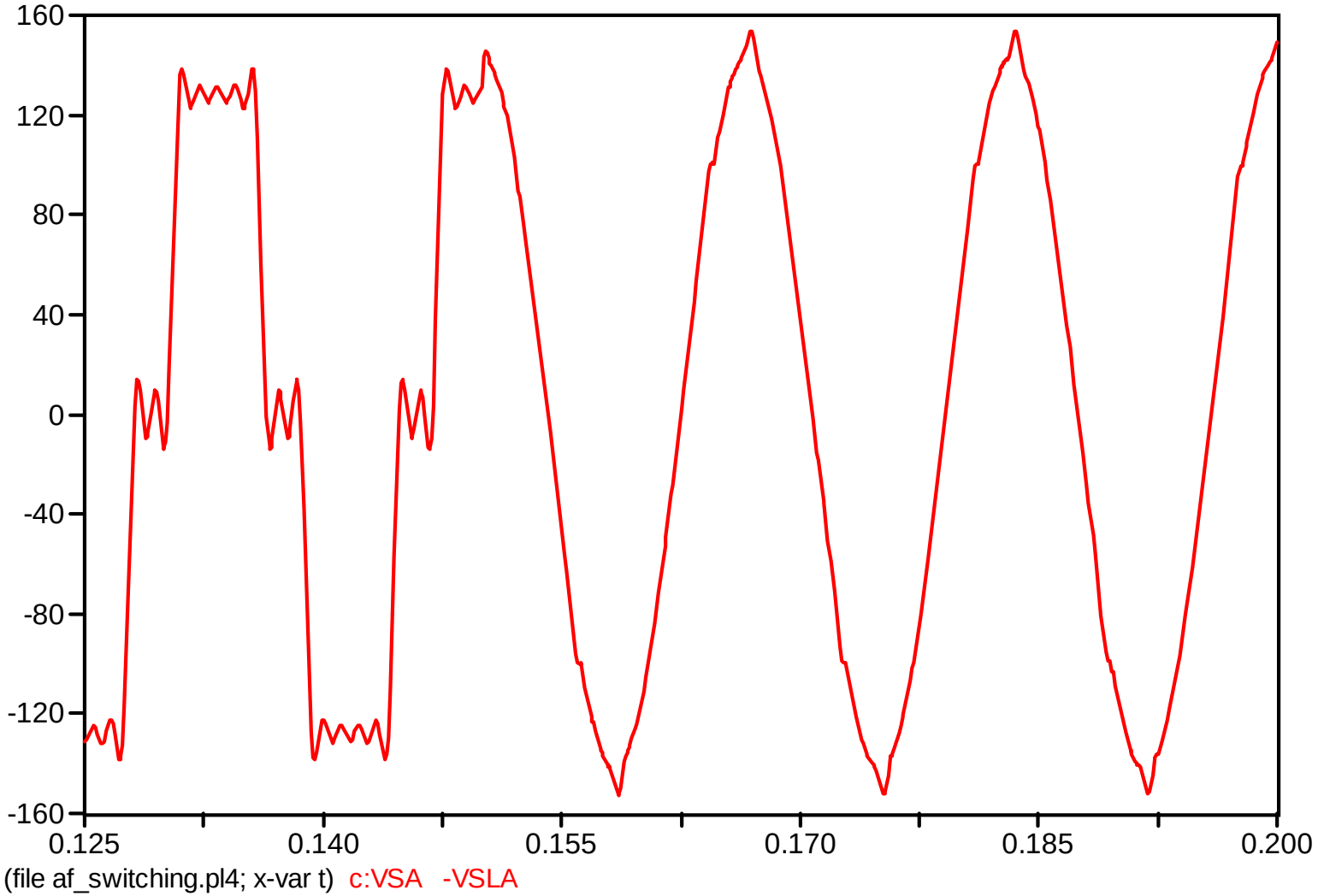
160
120
80
40
0
-40
-80
-120
-160
0.125
0.140
0.155
0.170
0.185
0.200
(file af_switching.pl4; x-var t) c:VSA -VSLA