ECE 421: Homework #3

Due Session 13 (October 4)

1. A single phase transformer has 2000 turns on the primary winding and 500 turns on the secondary winding. Winding resistances are $R_1 = 2$ ohm and $R_2 = 0.125$ ohm; leakage reactances are $X_1 = 8$ ohm and $X_2 = 0.5$ ohm. The resistance load on the secondary is 12 ohm.

   (a) If the applied voltage at the terminals of the primary is 1000 V, determine V_2 at the load terminals of the transformer, neglecting magnetizing current.

   (b) If the voltage regulation is defined as the difference between the voltage magnitude at the load terminals of the transformer at full load and at no load in percent of full load voltage with input voltage held constant, compute the percent voltage regulation.

2. A single-phase 50 kVA, 2400/240-volt, 60 Hz distribution transformer is used as a step-down transformer at the load end of a 2400-volt feeder whose series impedance is (1.0 + j2.0) ohms. The equivalent series impedance of the transformer is (1.0 + j2.5) ohms referred to the high voltage (primary) side. The transformer is delivering rated load 0.8 power factor lagging and at rated secondary voltage. Neglecting the transformer exciting current, determine:

   (a) the voltage at the transformer primary terminals.

   (b) the voltage at the sending end of the feeder, and

   (c) the real and reactive power delivered to the sending end of the feeder.

3. Using the transformer ratings as base quantities, work Problem 2 in per unit.

4. Consider the single-line diagram of the power system shown in the figure. Equipment ratings are:

Generator 1:	1000 MVA, 18 kV, X" = 0.2 per unit.
Generator 2:	1000 MVA, 18 kV, X" = 0.2 p.u.
Synchronous motor 3:	1500 MVA, 20 kV, X" = 0.2 p.u.
Three-phase Δ-Y transformers: T_1, T_2, T_3, T_4	1500 MVA, 500 kV Y/20 kV Δ, X = 0.1 p.u.
Three-phase Y-Y transformer T_5	1500 MVA, 500 kV Y/20 kV Y, X = 0.1 p.u.

Neglecting the resistance, transformer phase shift, and magnetizing reactance, draw the equivalent reactance diagram. Use a base of 100 MVA and 500 kV for the 50-ohm line. Determine the per unit reactances.

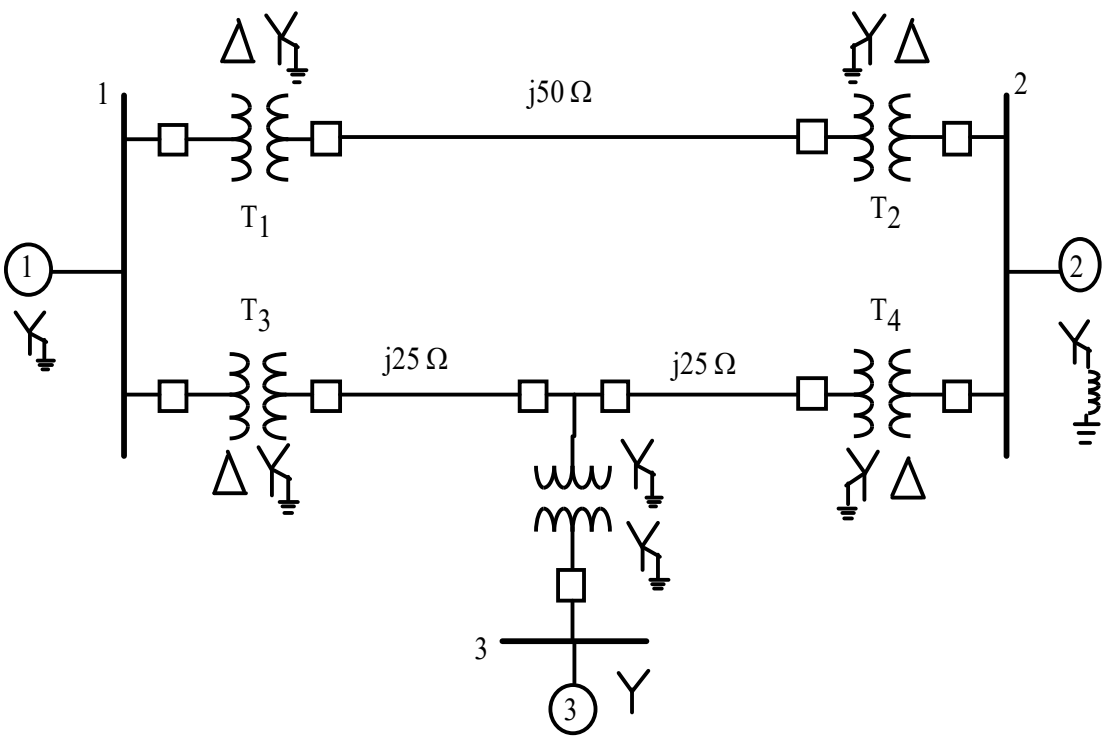

5. For the power system in Problem 4, the synchronous motor **at Bus 3** absorbs 1500 MW at 0.8 power factor leading with the bus 3 voltage at 18 kV. Determine the bus 1 and bus 2 voltages in kV. Assume that generators 1 and 2 deliver equal real powers and equal reactive powers. Also assume a balanced three-phase system with positive sequence sources.