# ECE 523: Homework #1

***Due Session 6 (Sept. 7)***

1. Sketch a per unit equivalent circuit for the system below. Use a 10 MVA system base. Start your voltage bases usng a rated voltage for the generator.

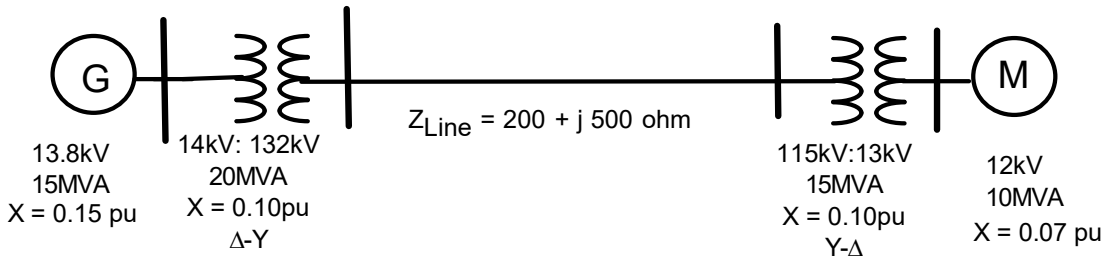

2. Sketch a per phase, per unit equivalent circuit for the system below. Use a system MVA base of 100 MVA, and a voltage base of 220 kV on the high voltage transmission line section.

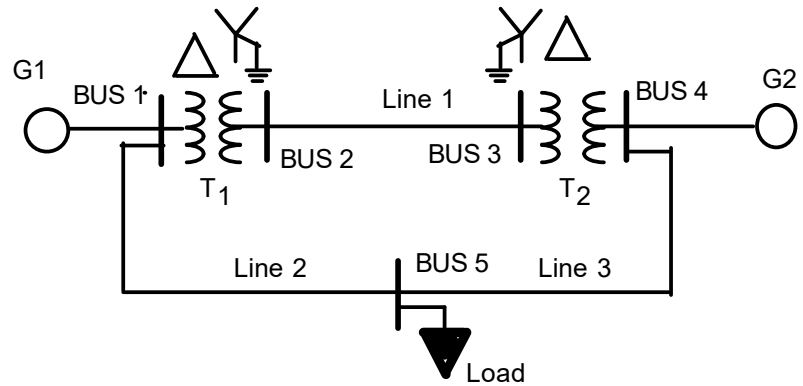


Using the following equipment nameplate data:

| | |
|---|---|
| G1: | 50 MVA, 13.8 kV, X = 15% |
| G2: | 25 MVA, 14.4 kV, X = 15% |
| T1: | 60 MVA, 13.8 : 230 kV, X = 10% |
| T2: | 30 MVA, 230 : 13.8 kV, X = 10% |
| Line 1: | 10 + j100 Ohm |
| Line 2: | 0.05 + j0.5 Ohm |
| Line 3: | 0.05 + j0.5 Ohm |
| Load: | 25 MVA, 0.9 pf lagging |

3. A three-phase generator feeds three large synchronous motors over a 16 km, 115 kV transmission line, through a 115 kV:13.8 kV transformer bank, as shown below.

(a) Draw a per unit, per phasequivalent circuit with all reactances indicated in per unit on a 100 MVA base. Start the voltage bases from 13.8 kV base on the generator source

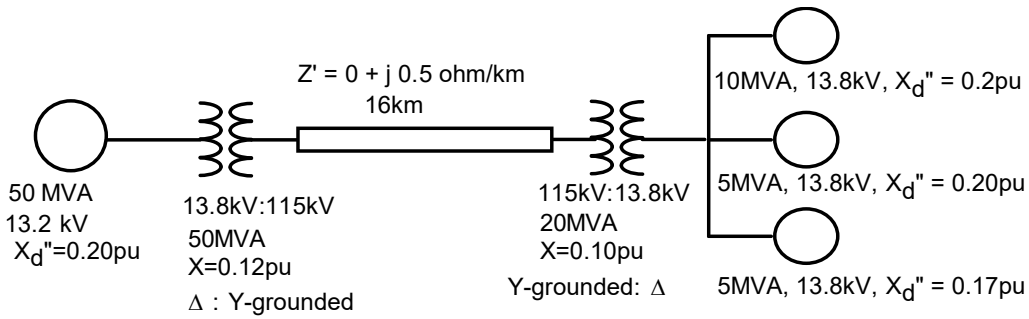


(b) The generator is controlled to maintain the voltage at the motor bus at 1.0 pu at an angle of 0 degrees. The three motors are operating at full rating and 90% PF lagging. Determine the voltage required at the generator terminals assuming that there is no voltage regulating taps or similar equipment in this system.

(c) Calculate the voltage required behind the subtransient reactance for the generator and each of the motors

(d) Calculate the line current in Amperes

4. Draw the per unit, Thevenin equivalent circuit for the system below looking out from the load bus if:

(a) The generator internal voltages are equal in magnitude and angle (label both as $E_1$ and present your results as a function of $E_1$)

(b) The generator internal voltages are not equal (label one as $E_1$ and the other $E_2$ in your solution, and present your results as a function of $E_1$ and $E_2$)

Impedance values (all on consistent bases, no change of base needed):

G1: X = 0.1 pu
G2: X = 0.1 pu
Line 1: X = 0.1 pu
Line 2: X = 0.1 pu
Load: Z = j 0.1 pu

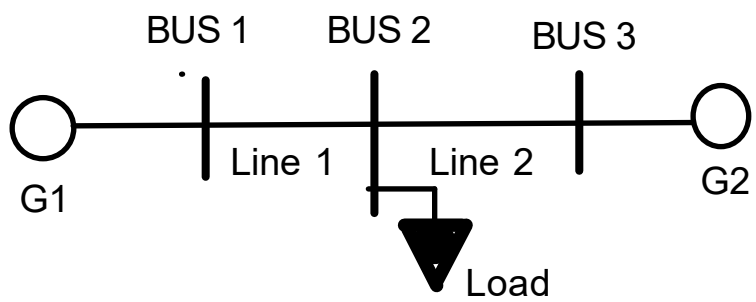

5. The following table of values has been prepared for the various line sections.. Find the total pu impedance and shunt susceptance of each line on a 10 MVA base, using the line nominal voltage as a voltage base. Sketch a nominal pi model for each line.

| Nominal Voltage (kV) | Line Length (mi) | Wire Size and Material | R (Ω/mi) | X (Ω/mi) | $X_c$ (MΩ-mi) |
|---|---|---|---|---|---|
| 13.8 | 5.0 | 4/0 Cu | 0.278 | 0.690 | 0.160 |
| 13.8 | 2.0 | 4 Cu | 1.374 | 0.816 | 0.193 |
| 13.8 | 3.9 | 4/0 Al | 0.445 | 0.711 | 0.157 |
| 13.8 | 6.2 | 336.4 Al | 0.278 | 0.730 | 0.172 |
| 13.8 | 7.3 | 556.5 Al | 0.088 | 0.330 | 0.142 |
| 69.0 | 10.0 | 4/0 Al | 0.445 | 0.711 | 0.157 |
| 69.0 | 25.0 | 336.5 Al | 0.278 | 0.730 | 0.172 |