ECE 523: Homework #2

Due Session 9 (September 19)

1. Determine the symmetrical components for the following currents and sketch a phasor diagram, based on

(a) Phase "a" referenced components
(b) Phase "b" referenced components
(c) Phase "c" referenced components

$$I_A := 0A \cdot e^{0deg}$$

$$I_B := 0A \cdot e^{-j \cdot 120deg}$$

$$I_C := 2500A \cdot e^{j \cdot 30deg}$$

2. Repeat problem 1. with the following currents:

$$I_A := 4500A\, e^{-j \cdot 25.84deg}$$

$$I_B := 8503A \cdot e^{-j \cdot 229.5deg}$$

$$I_C := 4500A \cdot e^{j \cdot 94.16deg}$$

3. Determine the phase voltage given the following phase "a" referenced symmetrical components. Repeat assuming they are instead phase "b" and then phase "c" referenced symmetrical components

$pu := 1$

$$V_0 := 0.274pu \cdot e^{-j \cdot 90deg}$$

$$V_1 := 0.709pu \cdot e^{j \cdot 90deg}$$

$$V_2 := 0.299pu \cdot e^{-j \cdot 90deg}$$

4. If the load is unbalanced, neutral current will exist. Find the relationship between the neutral current I_n and the phase a zero sequence current I_{a0}

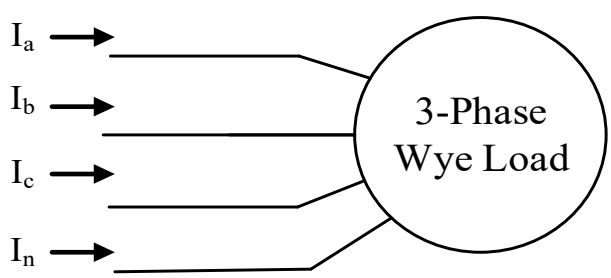

5. The ungrounded system below has a phase to ground fault on phase "a". Assume that the line to ground (and line to neutral voltages) were balanced three phase set before the fault occured. Do the following:
   (a) Find the symmetrical components of the phase a line-to-neutral voltages when a ground fault is applied ($V_{an0}, V_{an1}, V_{an2}$).
   (b) Repeat part (a) using line to ground voltages instead of the line to neutral voltages and find ($V_{ag0}, V_{ag1}, V_{ag2}$).

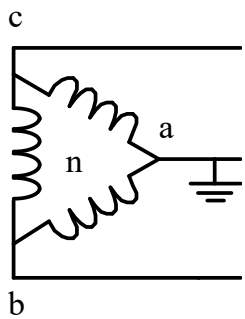

6. Do the following:

(a) A set of current transformers reads the following currents (in Amperes). If the current transformers each have a turns ratio of 5:500 (usually referred to as a current transformation ratio or CTR of 500:5) calculate the primary currents in amps.

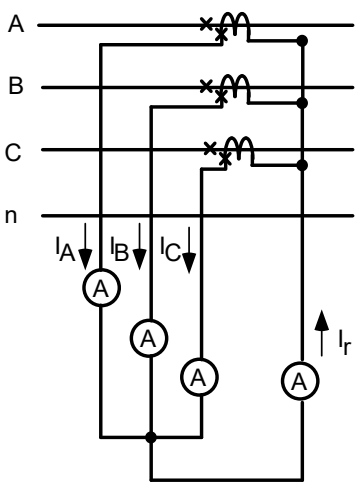

Note that the symbol: 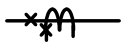

is equivalent to: 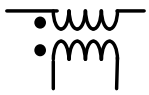

$$I_A := 12e^{-j\cdot 87deg}$$

$$I_B := 4\cdot e^{-j\cdot 120deg}$$

$$I_C := 4\cdot e^{j\cdot 120deg}$$

(b) Calculate the symmtrical components of the secondary currents (I_{a0}, I_{a1}, I_{a2}).

(c) Calculate the current measured by the fourth ammeter (I_r) and compare it to the zero sequence current calculated in part (b). How do they compare?

(d) Using the primary current calculated in part (a), repeat part (b) if the CTs are connected in delta (relay currents should lag the primary line currents by 30 degrees).