University of Idaho

ECE 529
Utility Applications of Power Electronics

Session 10

Diode and Thyristor Rectifiers

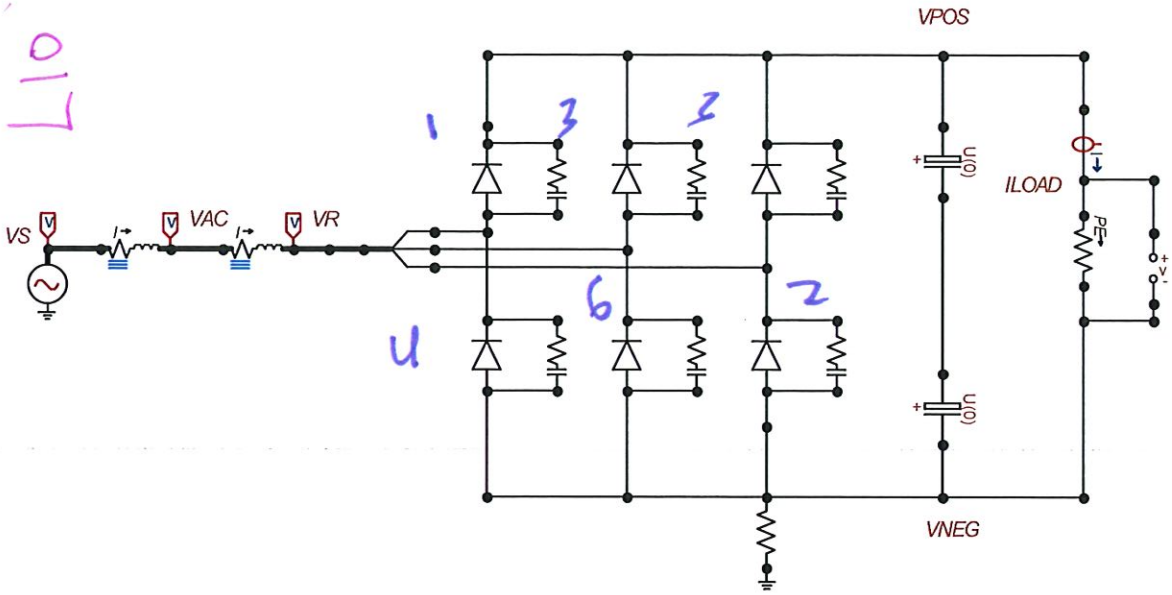

- AC current with low load current:

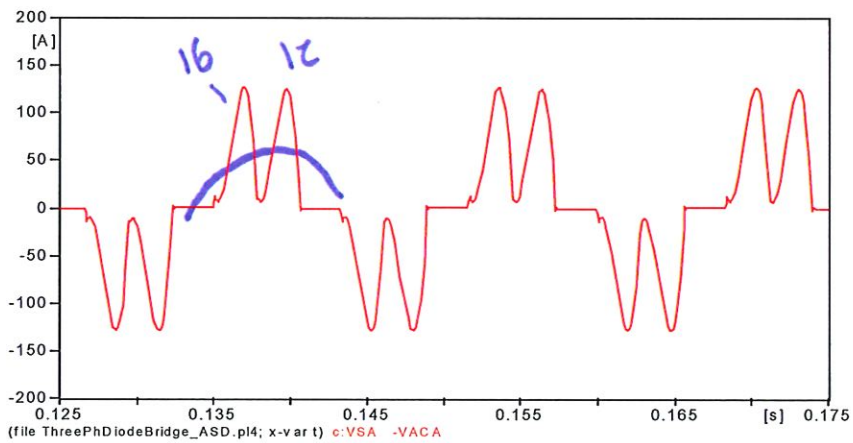

MC's PlotXY - Fourier chart(s). Copying date: 2/3/2023
File ThreePhDiodeBridge_ASD.pl4 Variable c:VSA -VACA [peak]
Initial Time: 0.2833 Final Time: 0.3

- Harmonic spectra

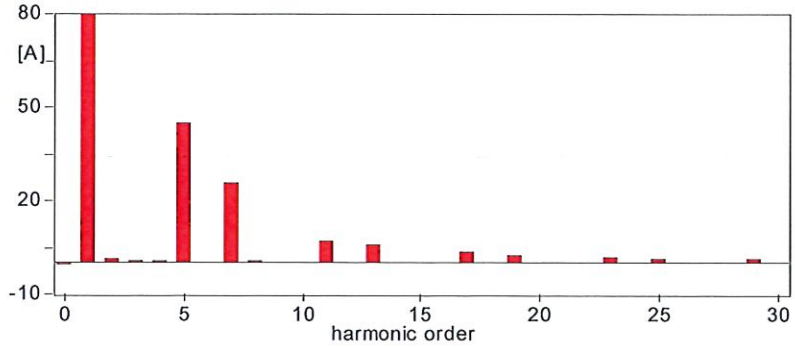

L10 2/15

- DC voltage

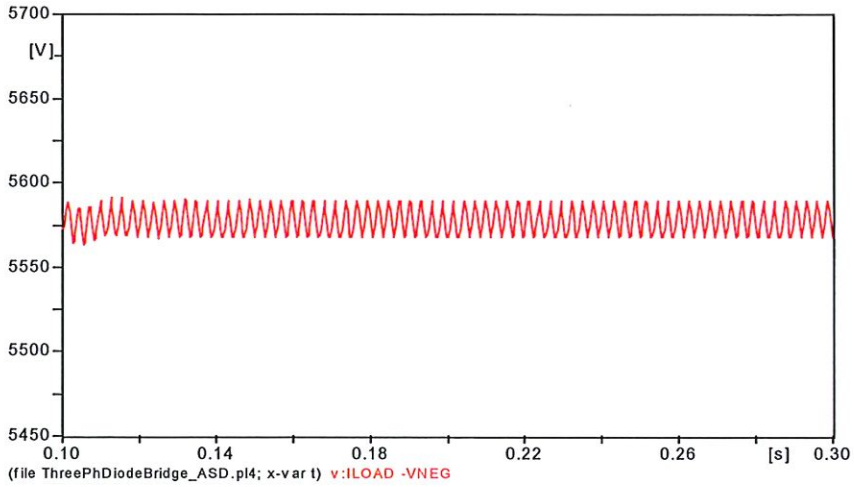

- Double load current

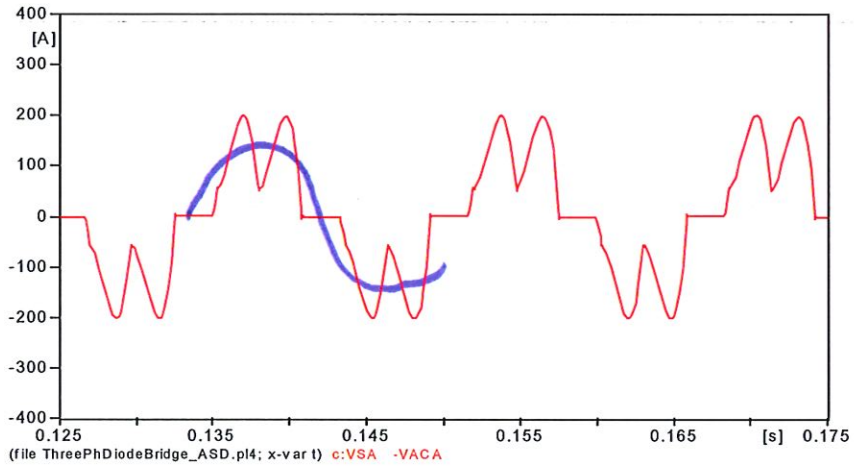

MC's PlotXY - Fourier chart(s). Copying date: 2/3/2023
File ThreePhDiodeBridge_ASD.pl4 Variable c:VSA -VACA [peak]
Initial Time: 0.2833 Final Time: 0.3

- Harmonic content

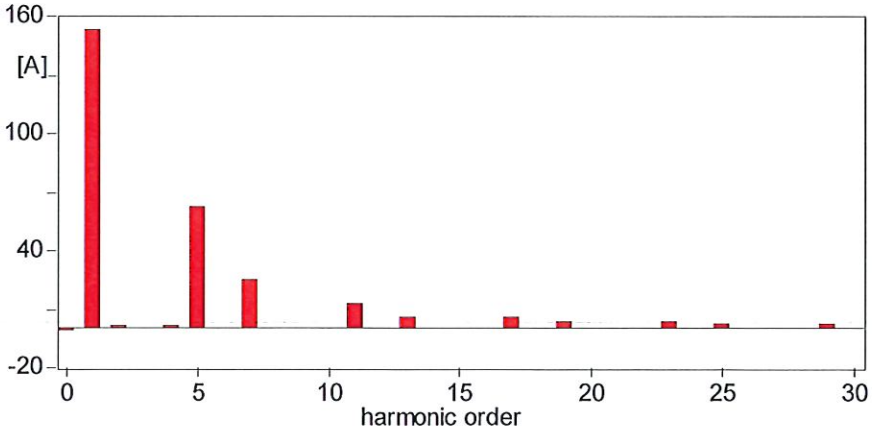

- Increase load current by factor of 4

L10 3/15

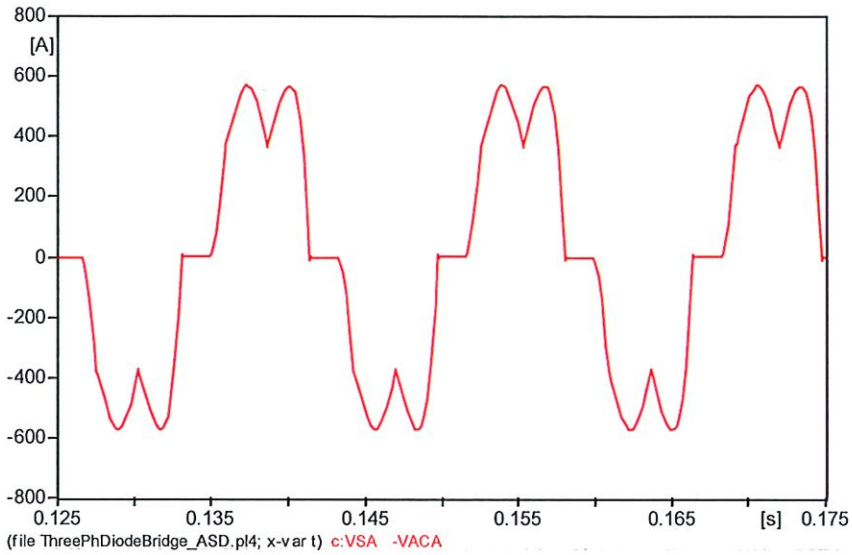

Harmonic spectra:

MC's PlotXY - Fourier chart(s). Copying date: 2/3/2023
File ThreePhDiodeBridge_ASD.pl4 Variable c:VSA -VACA [peak]
Initial Time: 0.2833 Final Time: 0.3

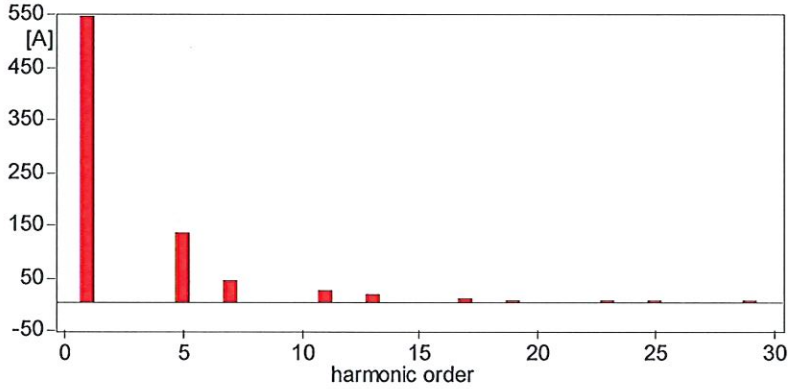

Thyristor Rectifier

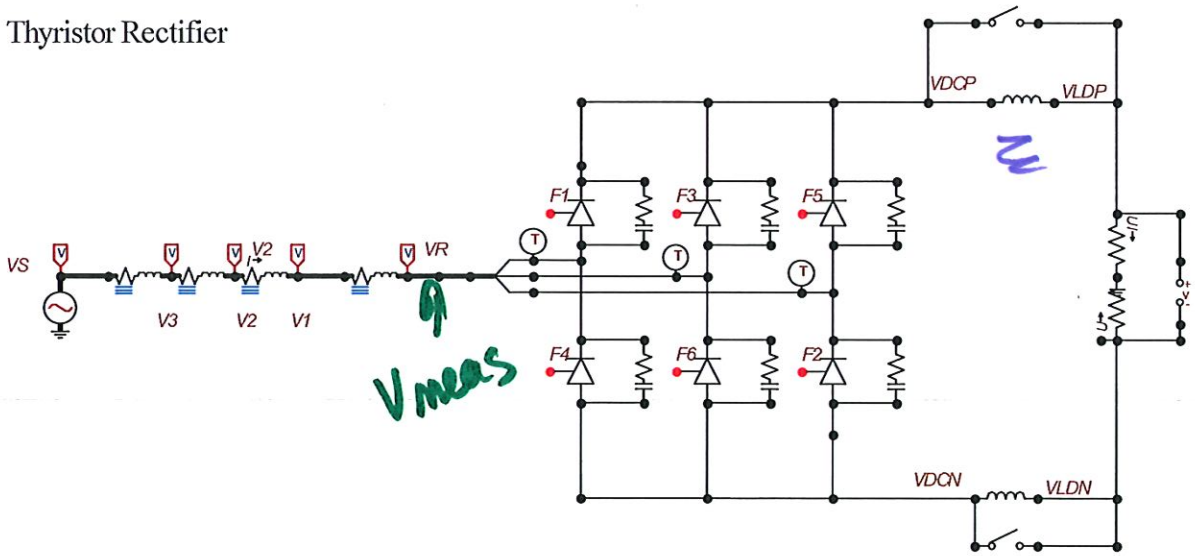

- Controls

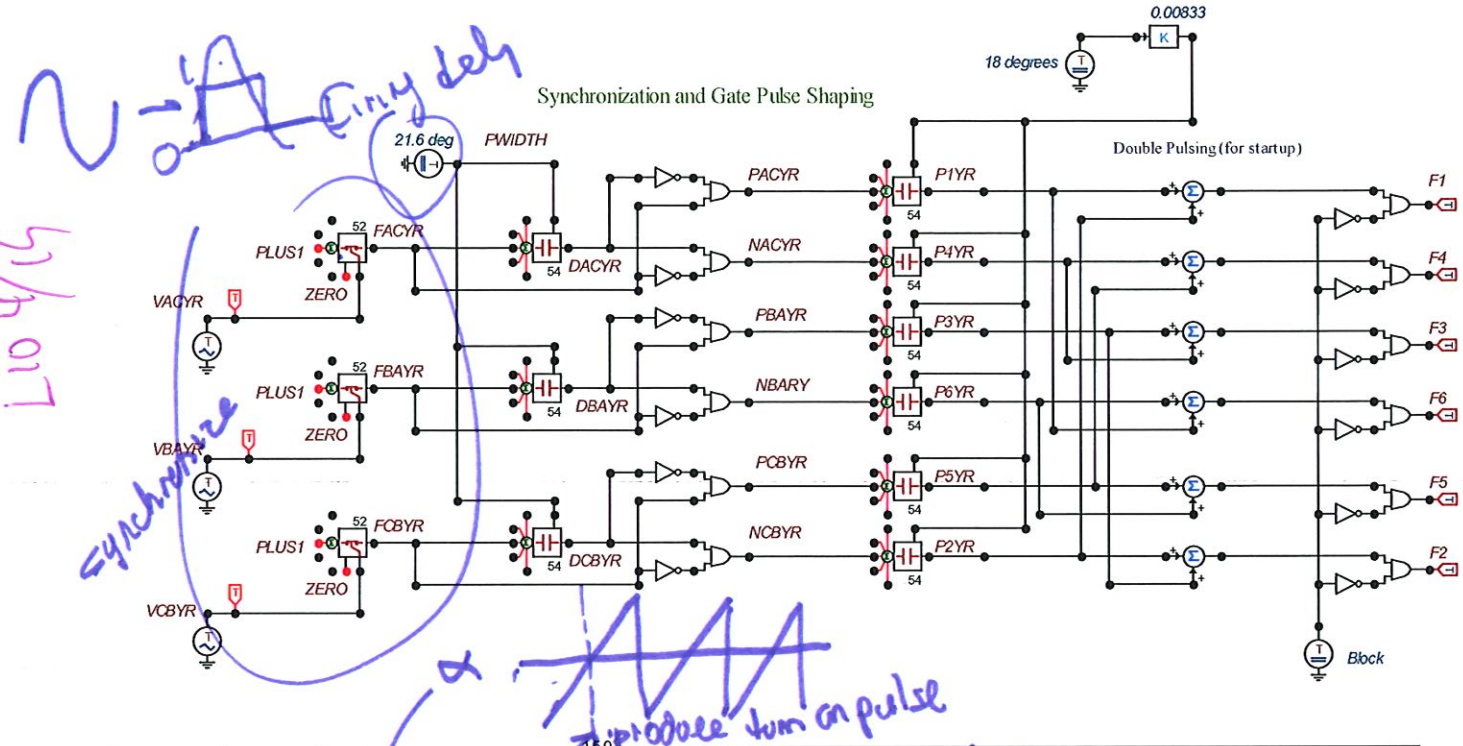

- Commutation overlap in ac current:

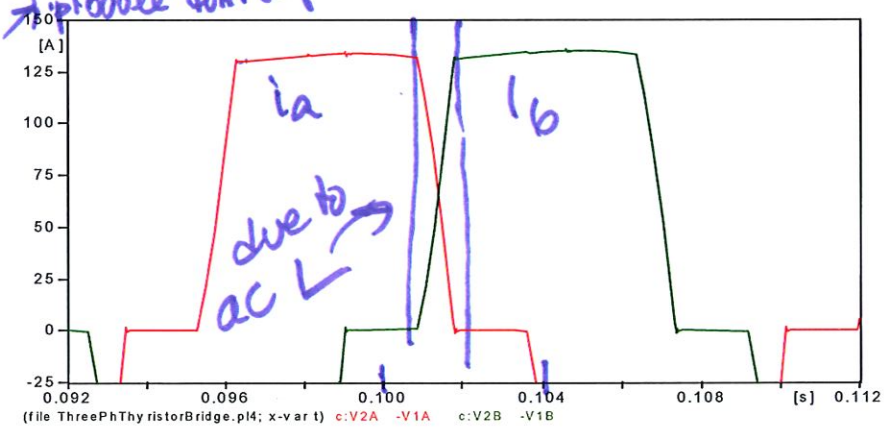

Remove ac inductance:

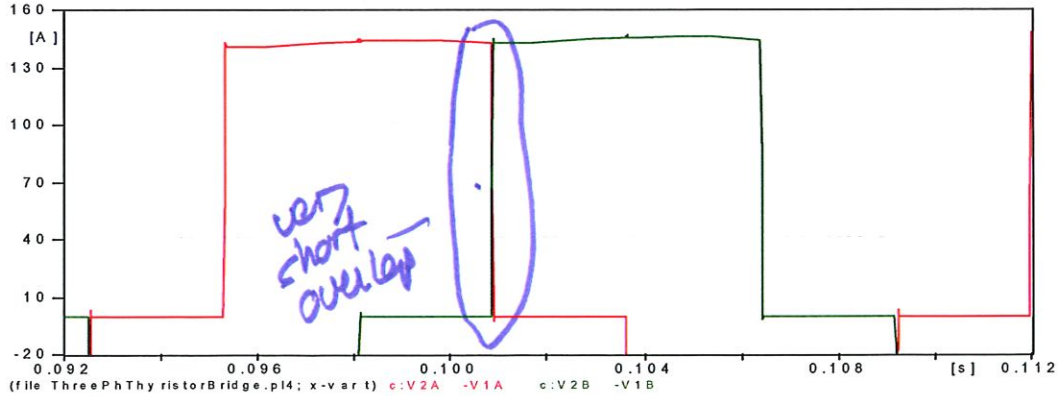

- Voltages with ac inductance

L10 5/15

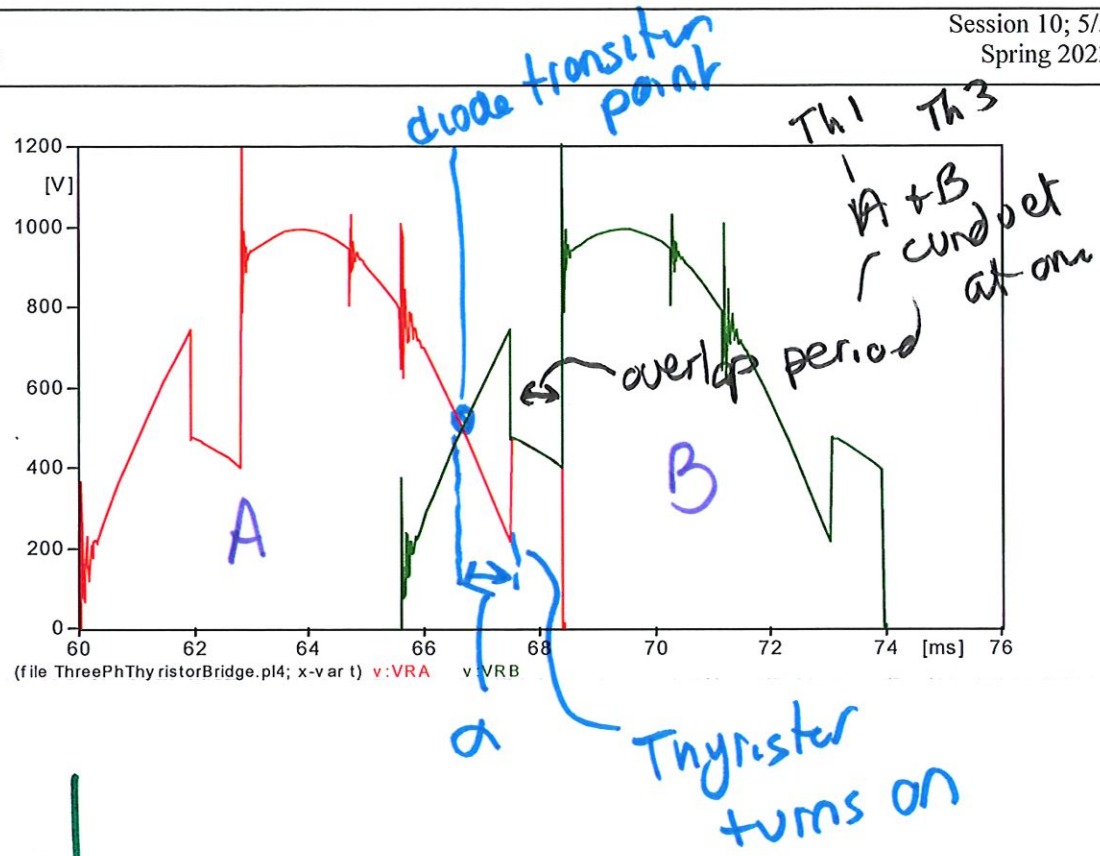

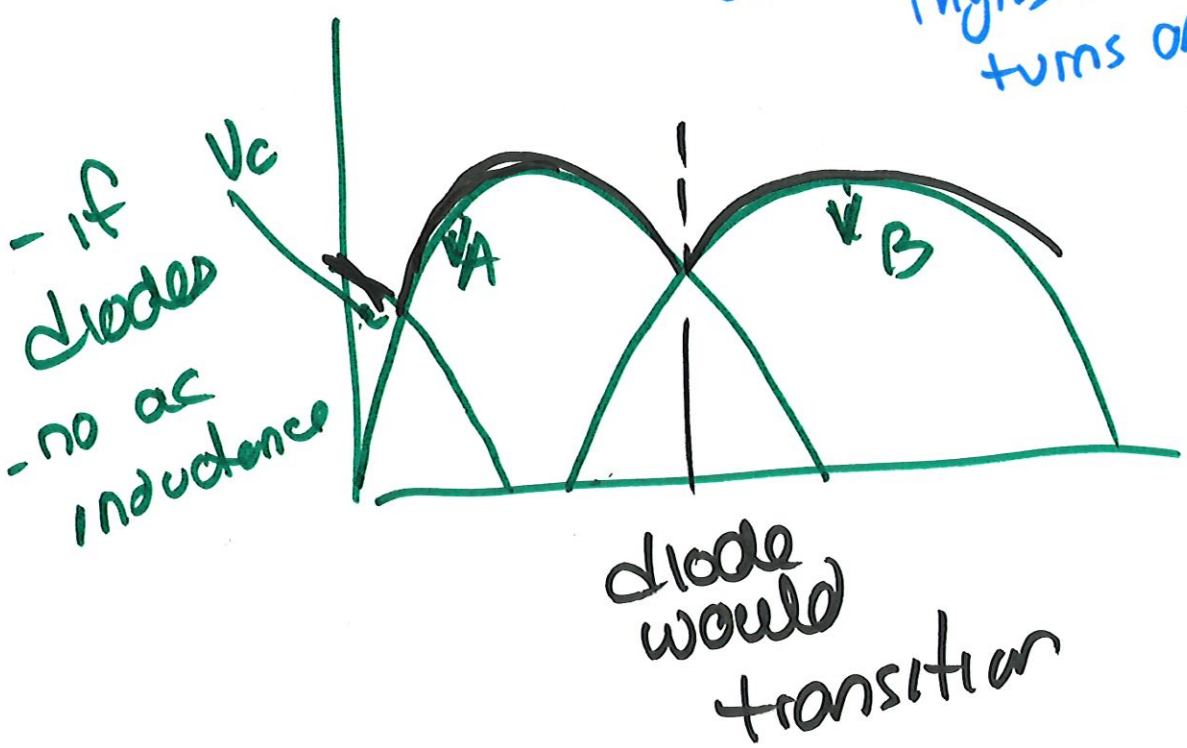

- PSCAD/EMTDC Implementation

L10 6/4

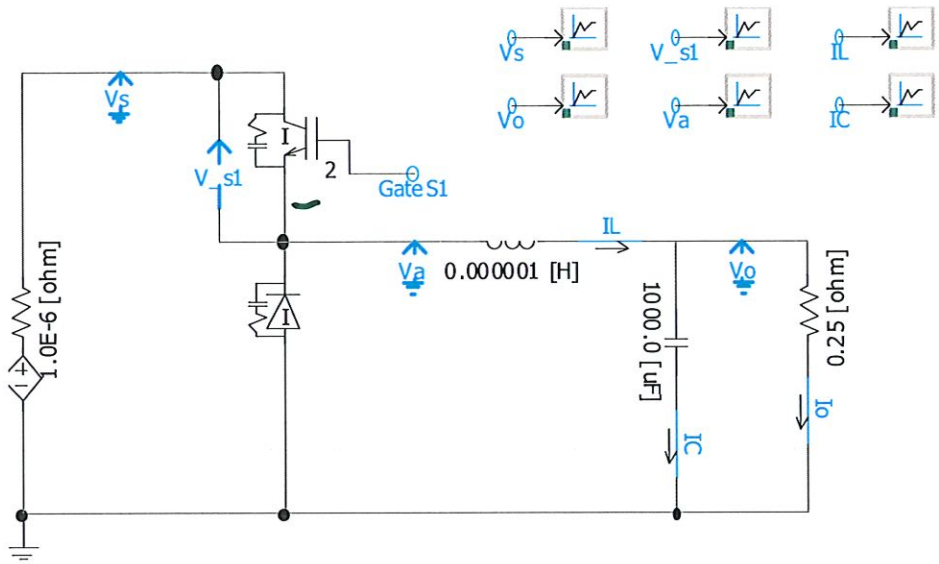

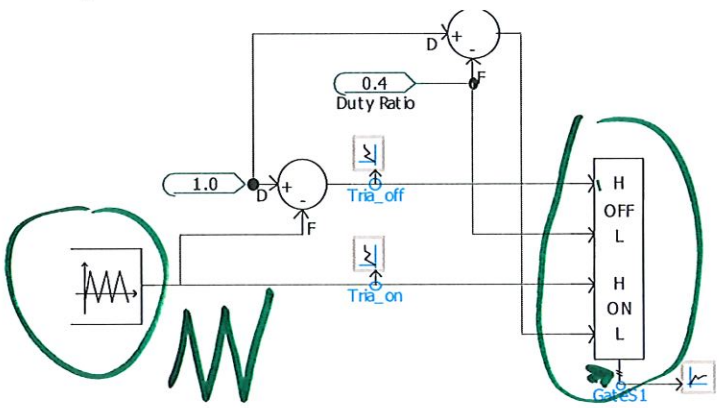

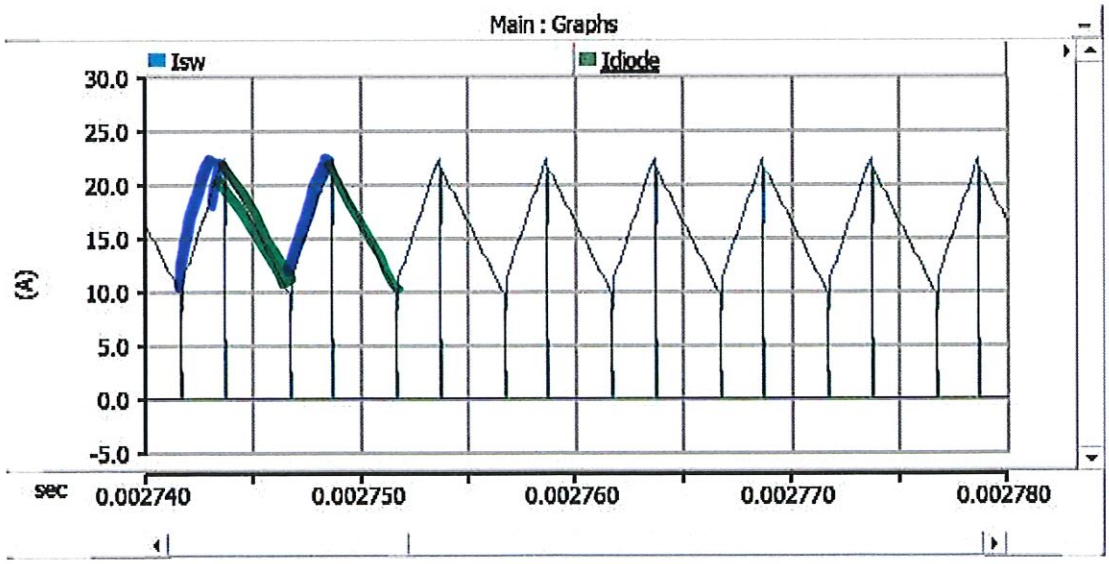

- EMTP-RV implementation

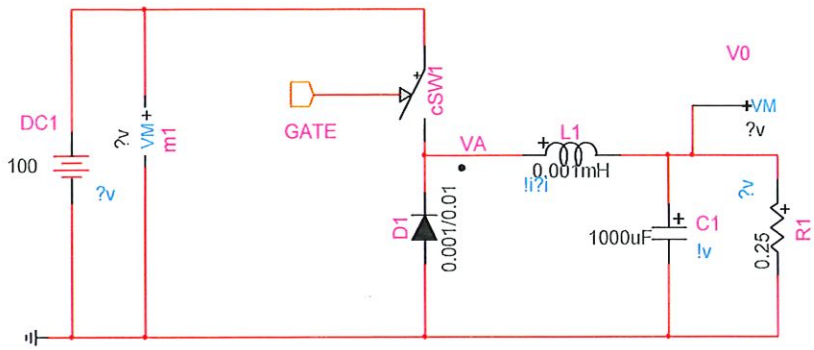

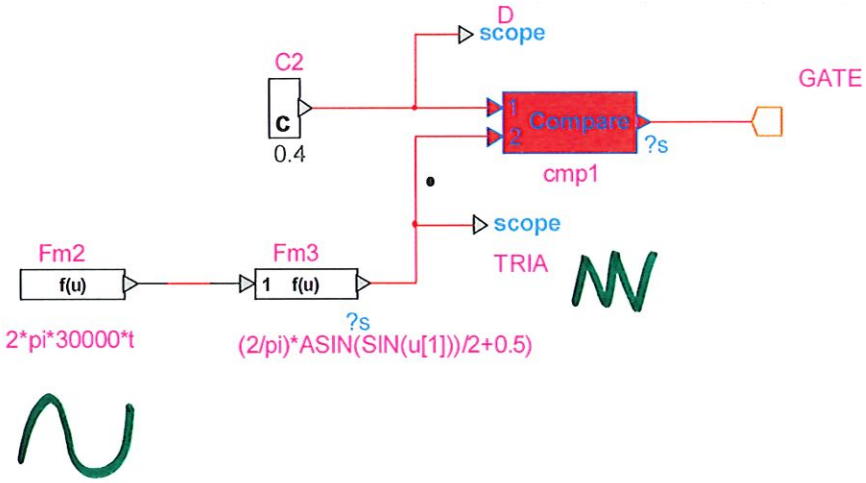

- EMTDC implementation

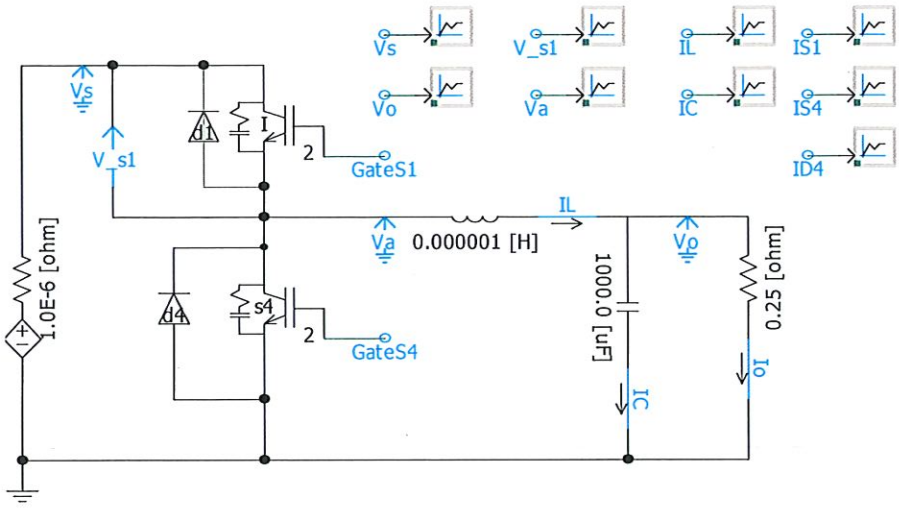

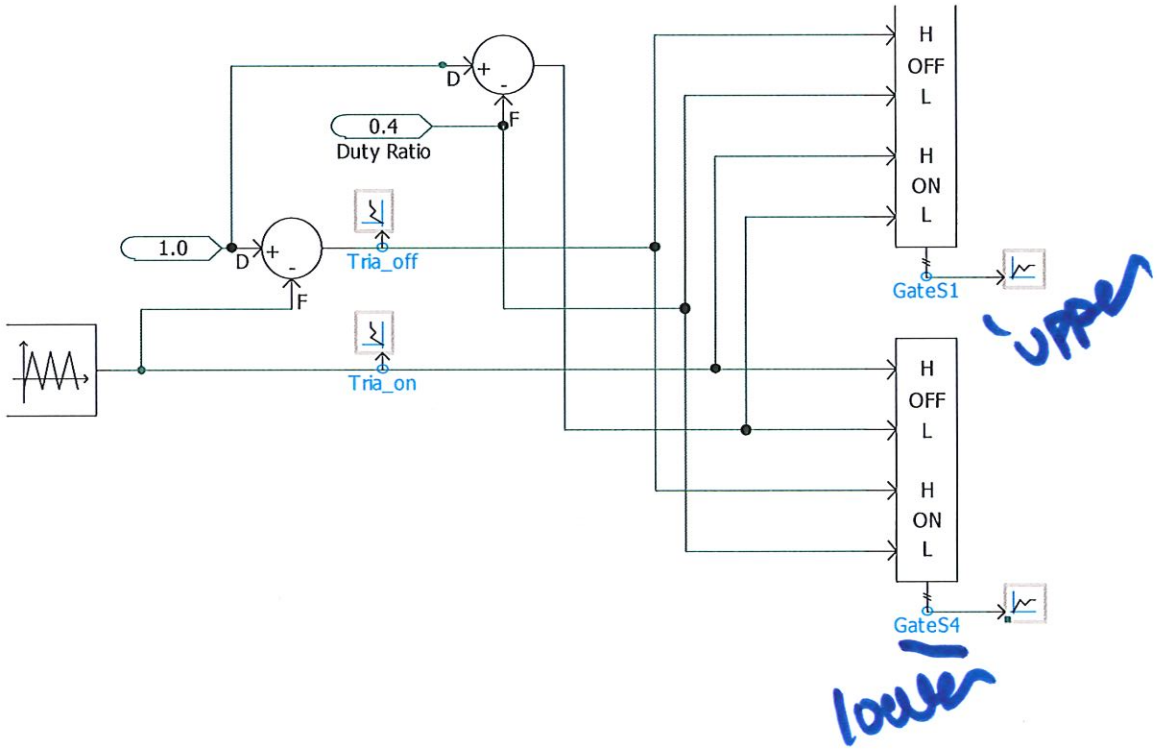

L10 9/15

Option 2: Two controlled Switches: Bidirectional Power Flow Support

- Replace diode with controlled switch
- Controlled in opposition to top switch

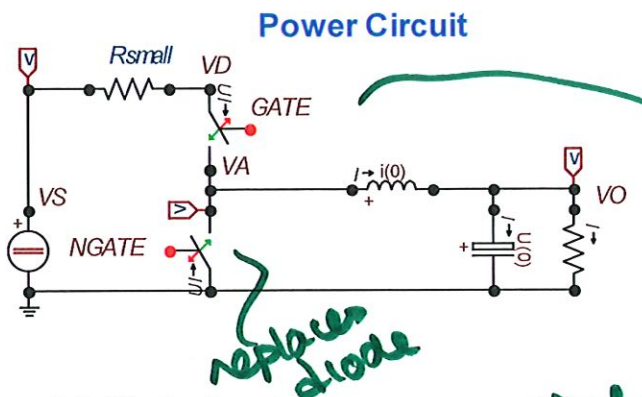

- Modification to controls

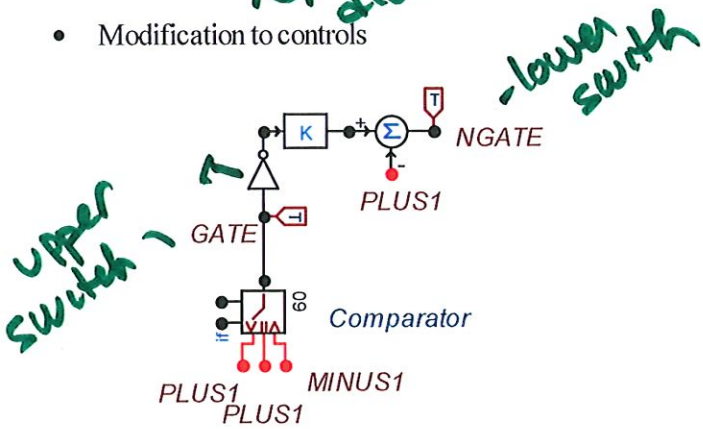

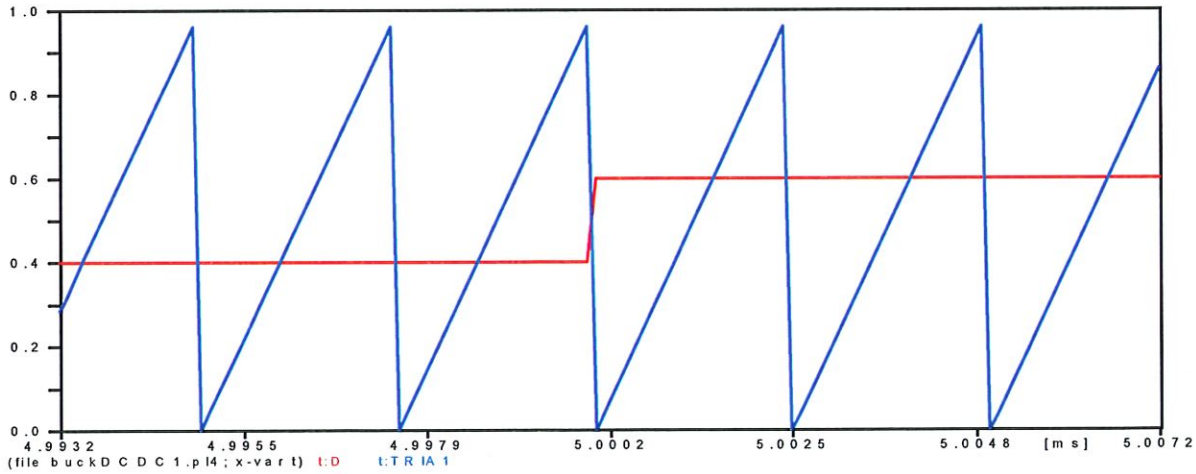

L10 10/15

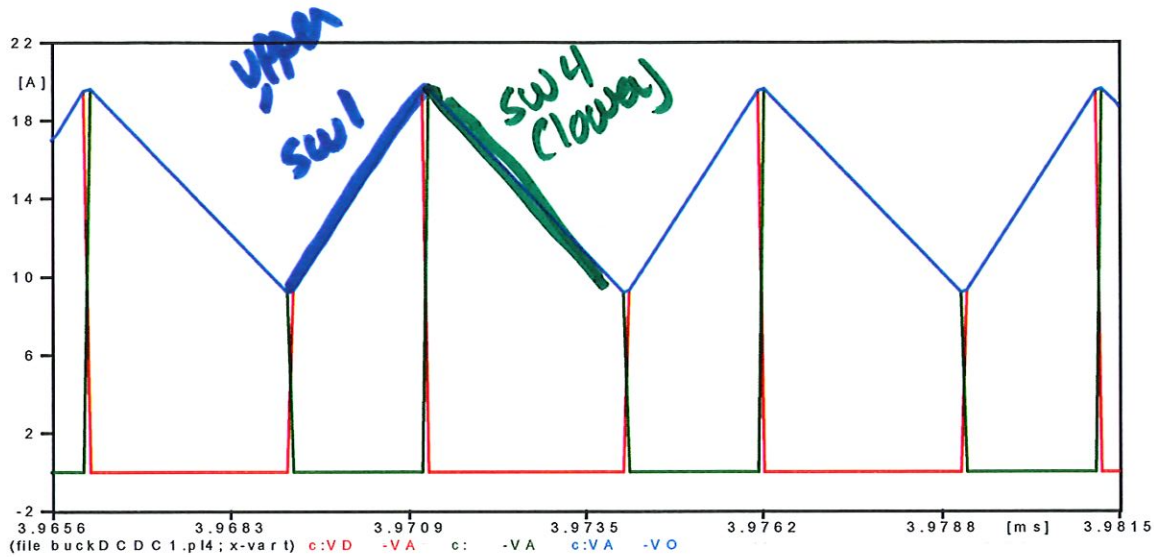
22
[A]
18
14
10
6
2
-2
upper
sw1
sw4
(lower)
3.9656
3.9683
3.9709
3.9735
3.9762
3.9788
[ms]
3.9815
(file buckDCDC1.pl4; x-var t) c:VD -VA c: -VA c:VA -VO

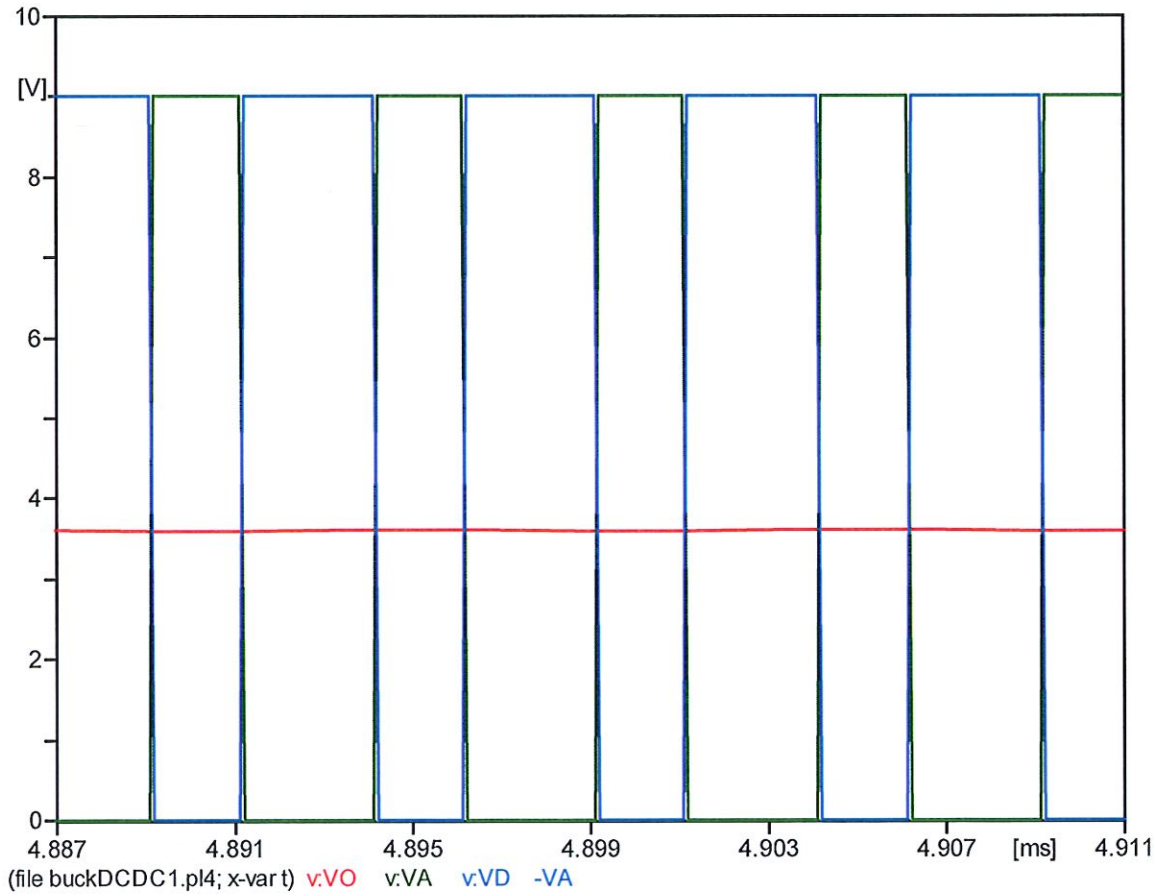
10
[V]
8
6
4
2
0
4.887
4.891
4.895
4.899
4.903
4.907
[ms]
4.911
(file buckDCDC1.pl4; x-var t) v:VO v:VA v:VD -VA

L10 11/15

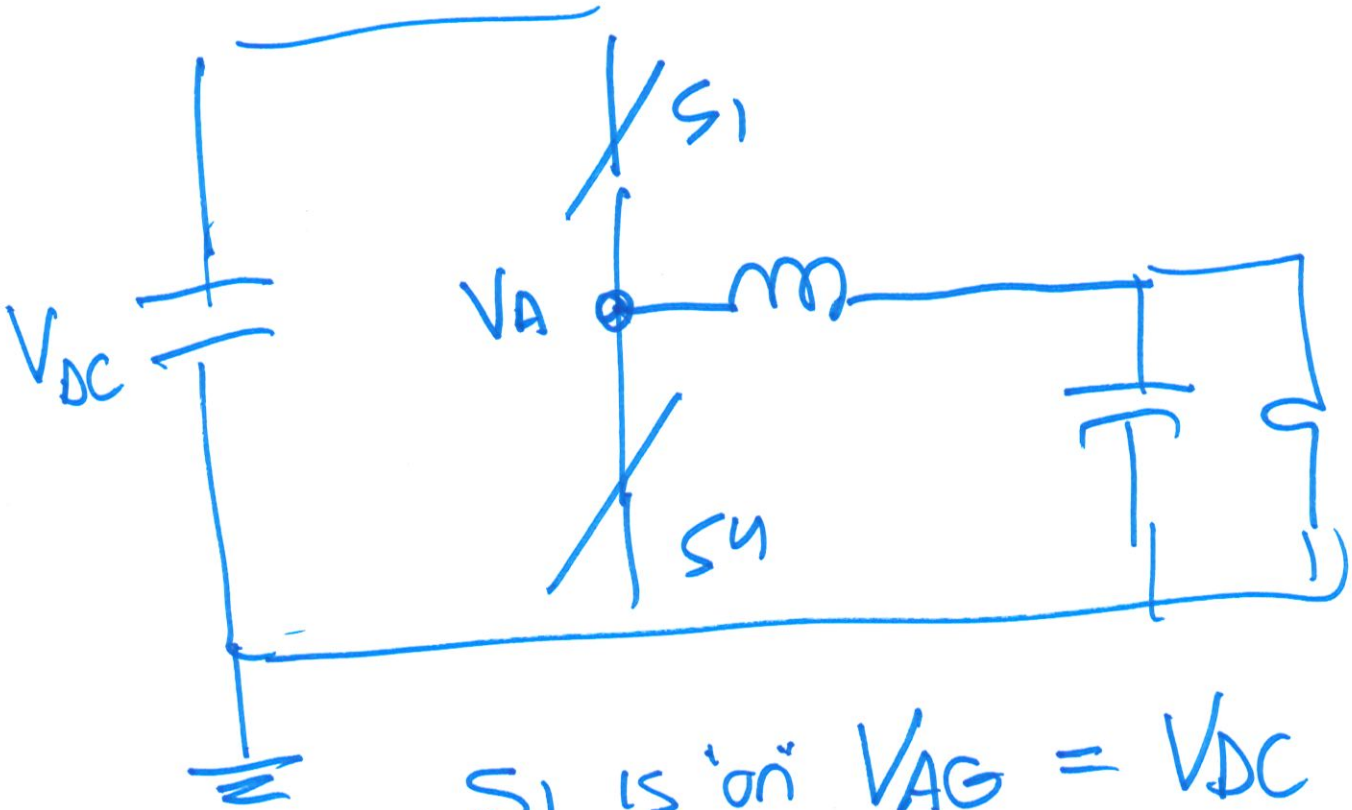

S1 is 'on' $V_{AG} = V_{DC}$

(closed)

S4 is on $V_{AG} = 0$

L 10 12/15

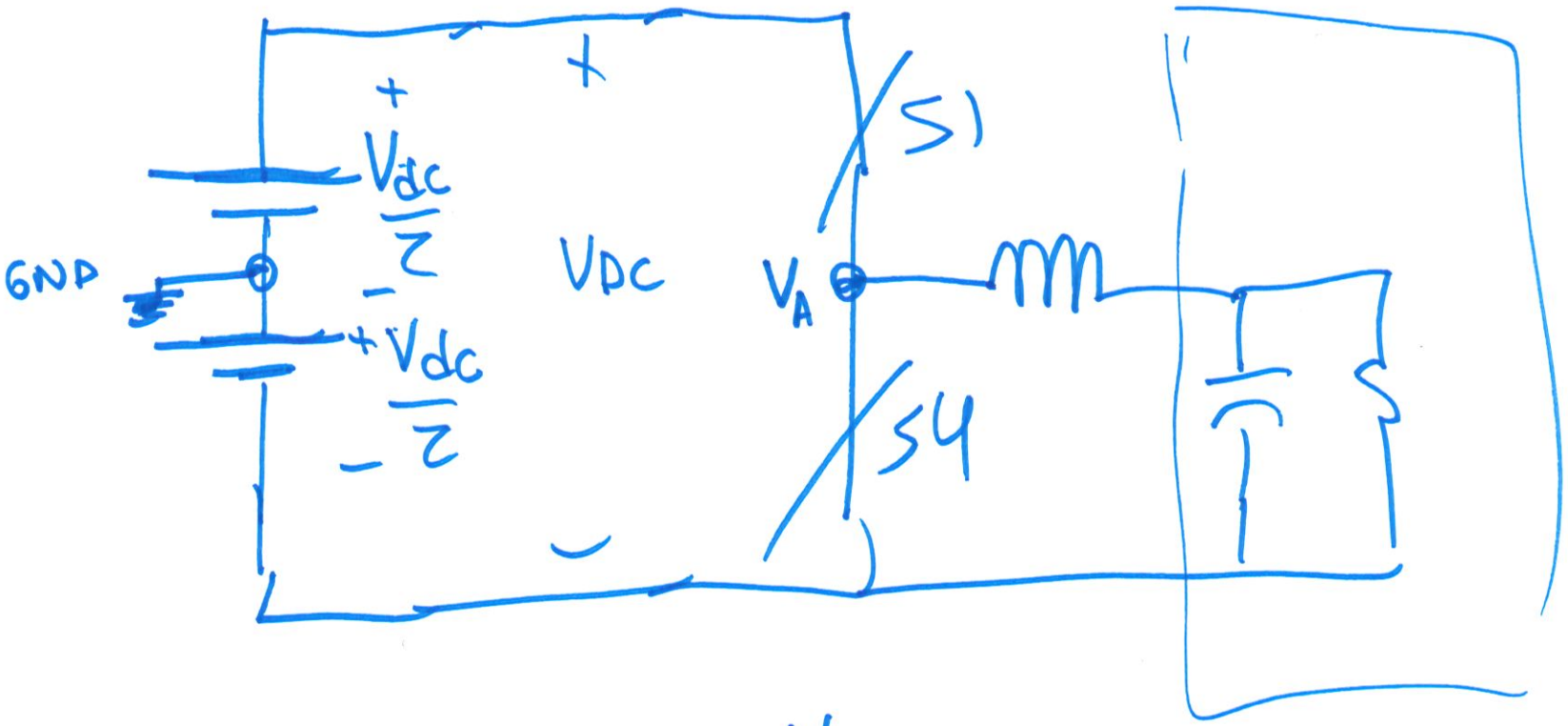

S1 is "on" $V_{AG} = \frac{V_{DC}}{2}$

S4 is on $V_{AG} = \frac{-V_{DC}}{2}$

S1 on when D > TRIANGLE

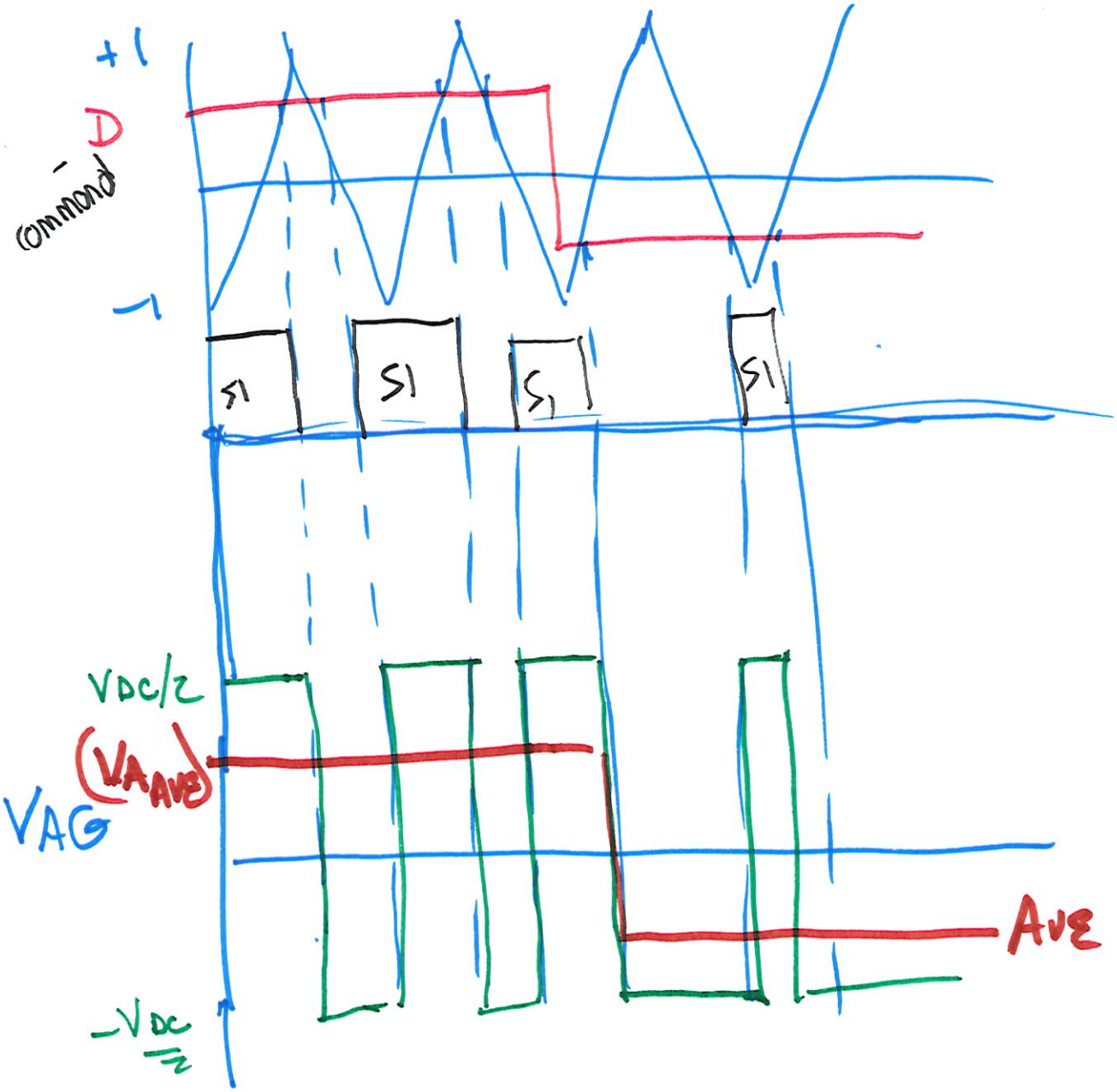

L7 9/6

L10 14/15

Simple dc/dc Example

ECE529

Lecture 7

ac system

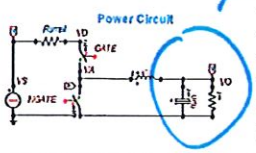

Carrier and voltage reference

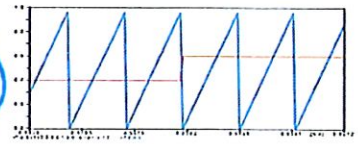

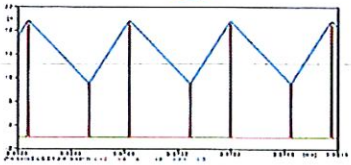

Switch and Inductor currents

Simple dc/ac Example

ECE529

Lecture 7

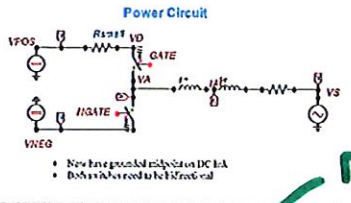

modulation ref

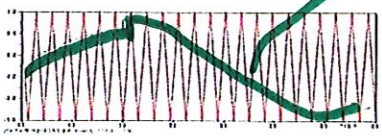

Carrier and voltage reference

L10 15/15

Simple dc/ac Example

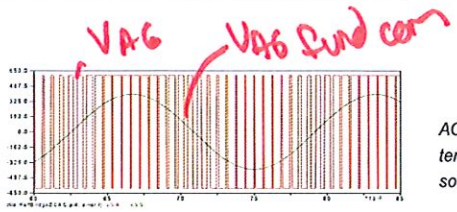

AC voltage: converter terminal and external source voltages

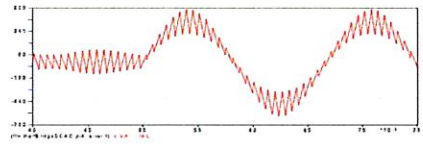

Inductor current