University of Idaho

ECE 529
Utility Applications of Power Electronics

Session 13

Open-Loop DC/AC Half Bridge Converter

Power Circuit

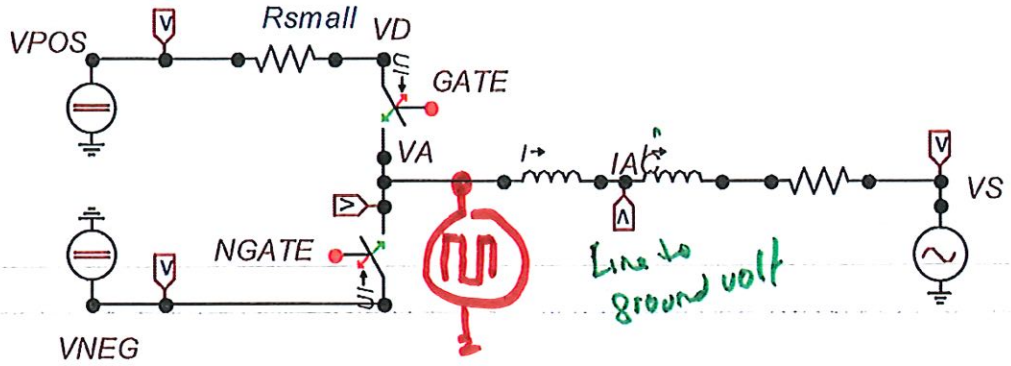

- Now have grounded midpoint on DC link
- Both switches need to be bidirectional

Gate Controls

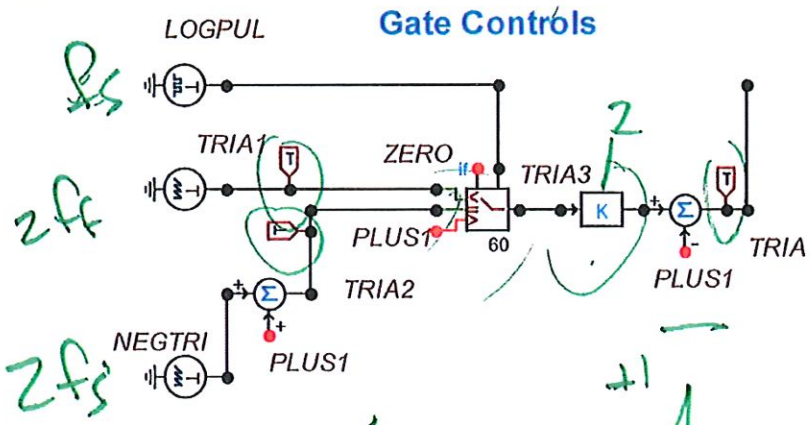

- Updated son

L13 2/11 ~~L12 10/12~~

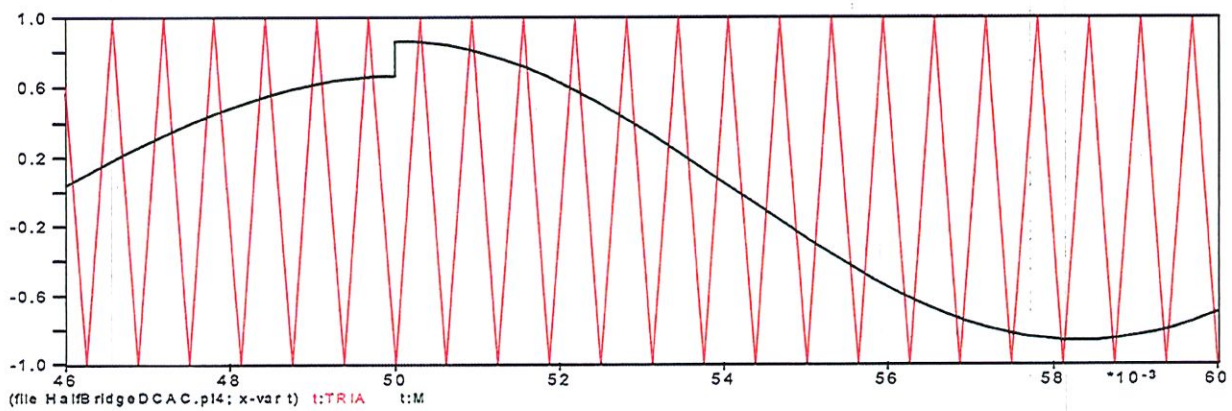

AC voltage

Va(t)

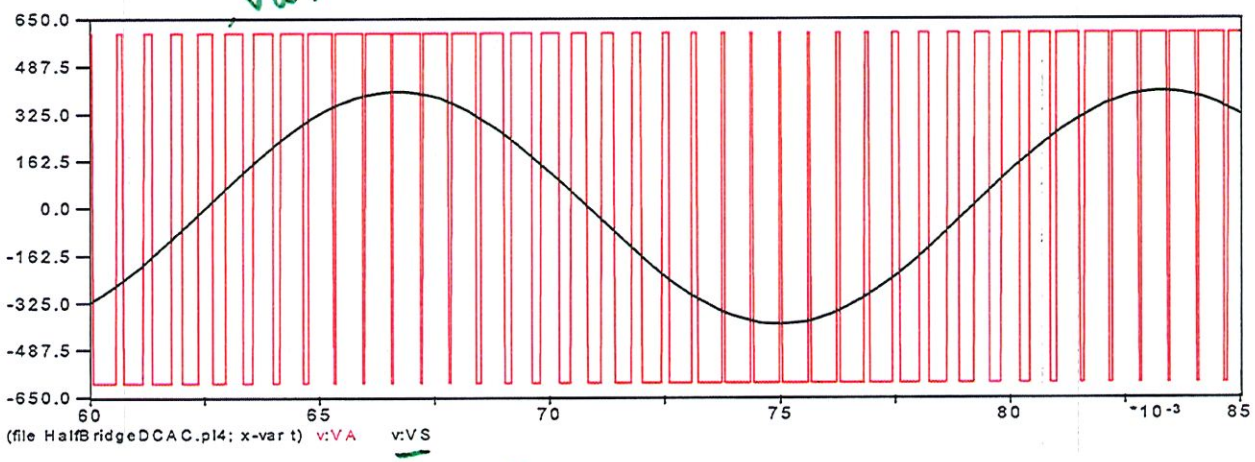

source voltage

L13 3/11 ~~L12 11/12~~

AC voltage between the two inductors compared to ac source

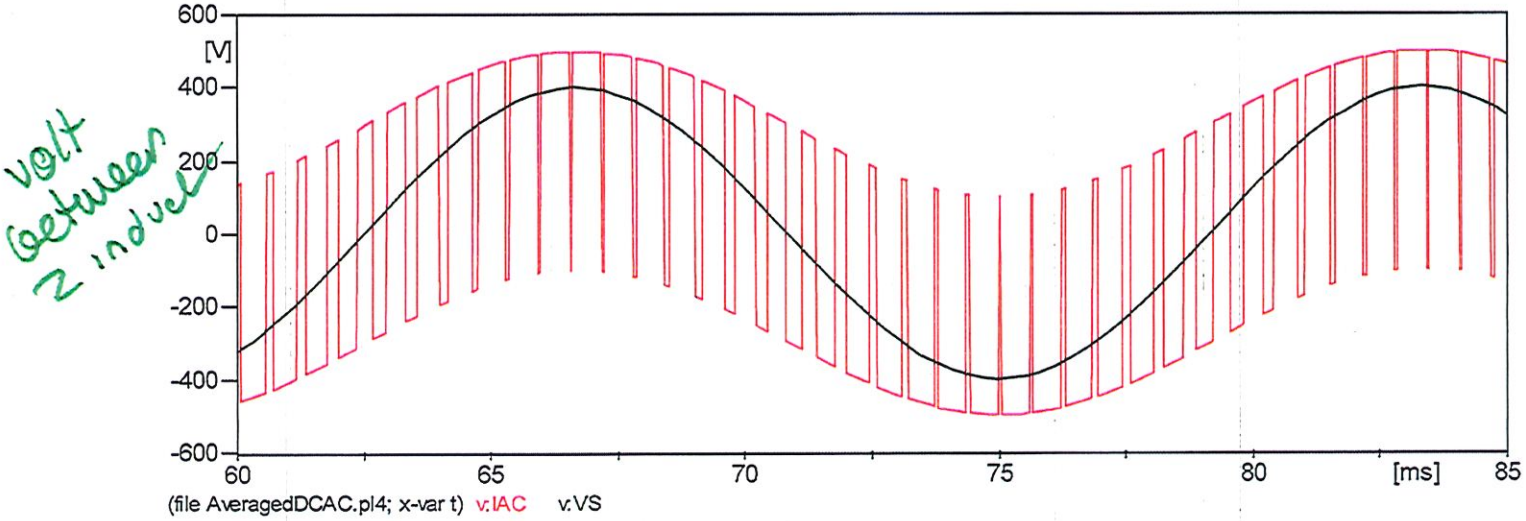

AC current

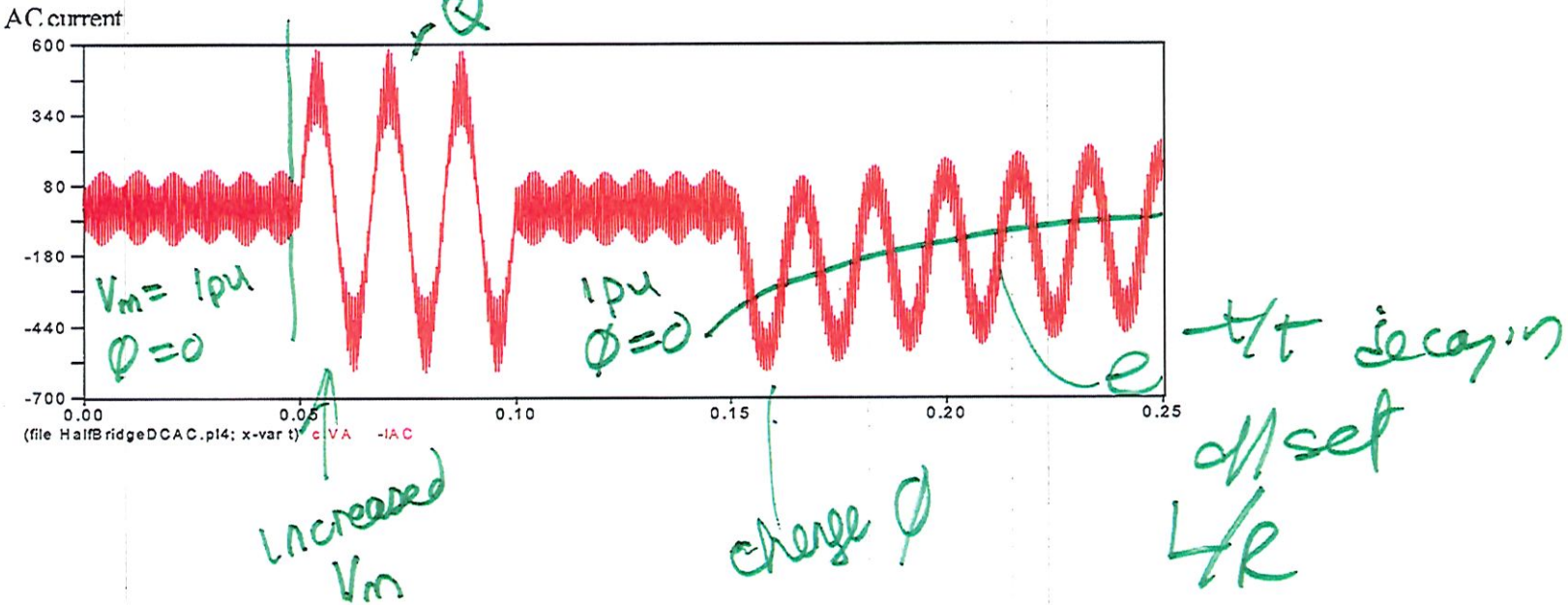

L13 4/11 ~~L12 12/12~~

Zoomed current

rise when S1 on
fall when S4 on & with Vs(t)

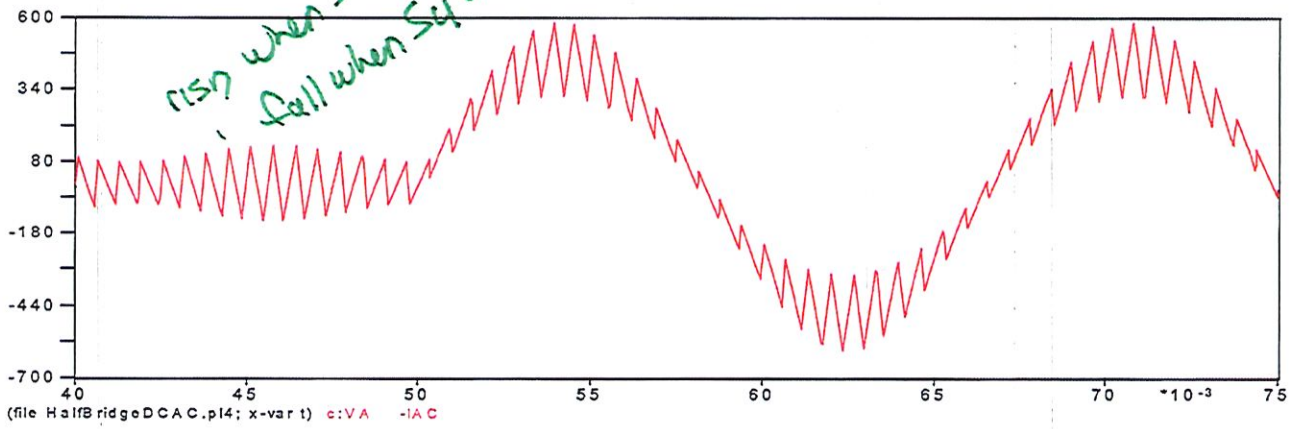

Current in switch 1

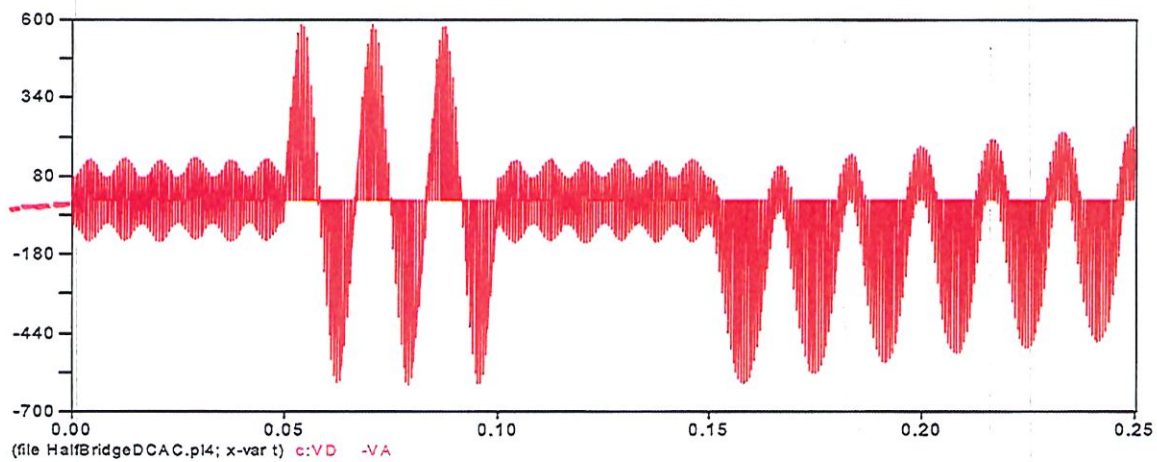

L13 5/11

PSCAD/EMTDC implementation

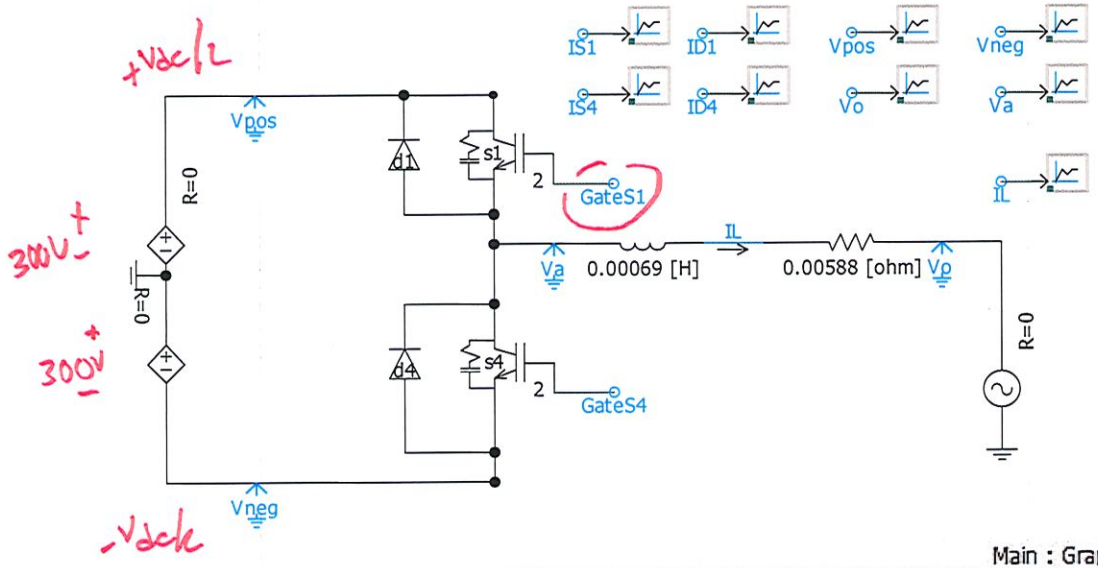

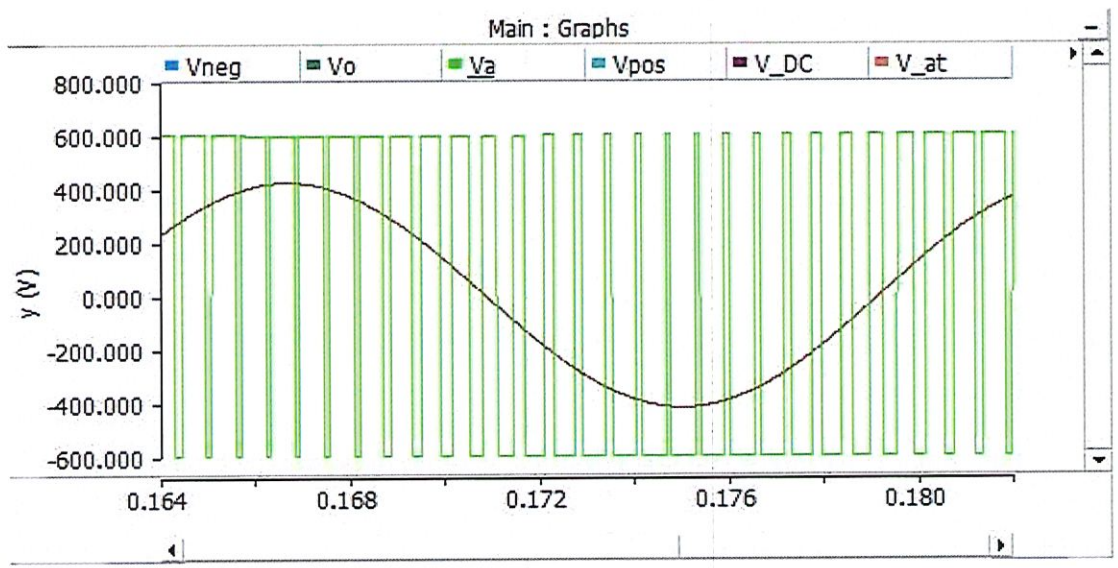

L13 6/11

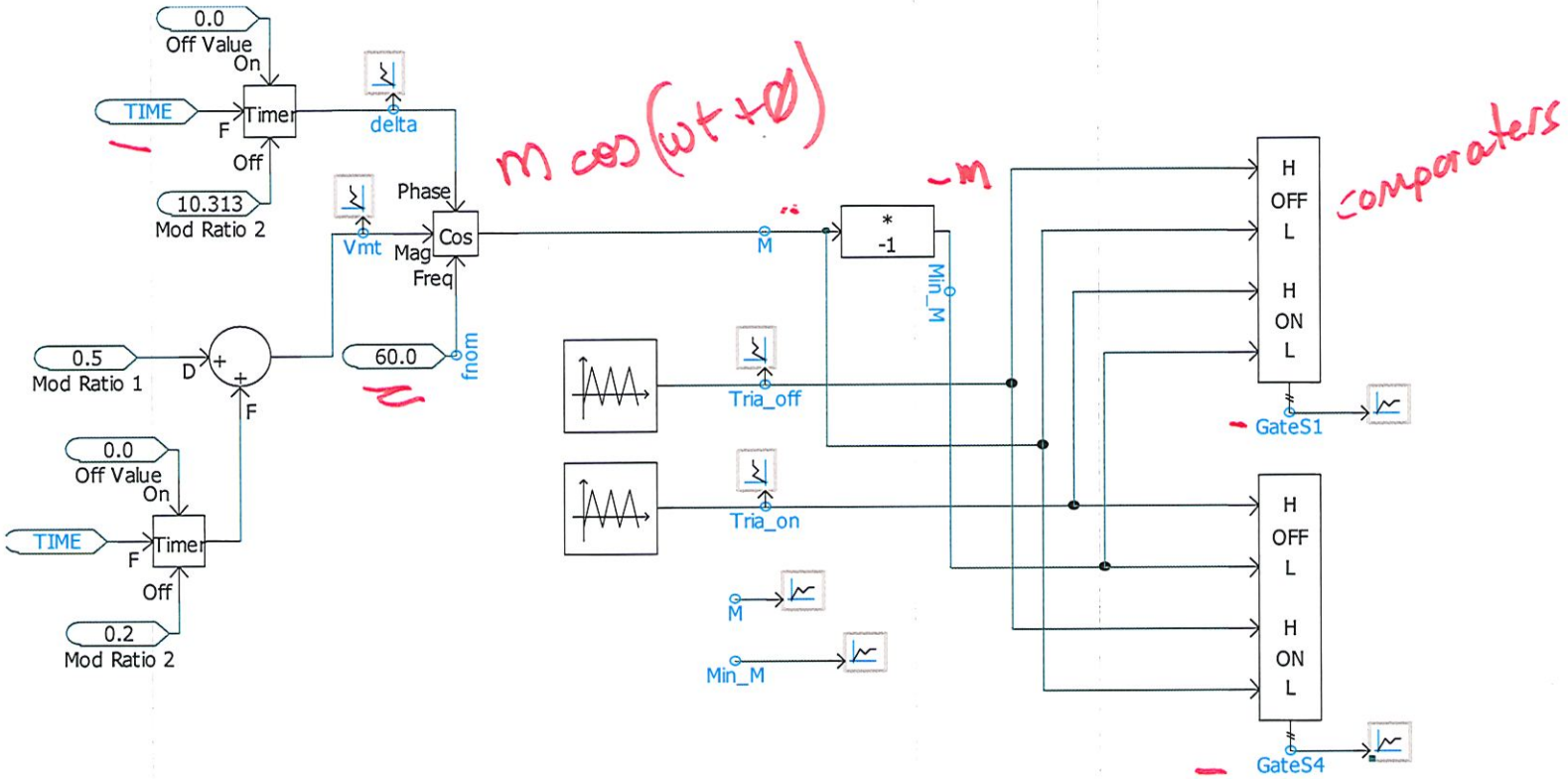
0.0
Off Value
On
TIME
Timer
F
Off
10.313
Mod Ratio 2
delta
Phase
Vmt
Mag
Cos
Freq
M
*
-1
Min_M
0.5
Mod Ratio 1
D
F
60.0
fnom
0.0
Off Value
On
TIME
Timer
F
Off
0.2
Mod Ratio 2
Tria_off
Tria_on
M
Min_M
H
OFF
L
H
ON
L
GateS1
H
OFF
L
H
ON
L
GateS4
m cos(ωt+φ)
-m
comparators

L13 7/11

- For some applications we don't need a switching model

→ Low frequency (including fundamental) <u>interaction with system</u>

→ control design / testing

↑ control interaction with power system is the greatest interest

L13 8/11

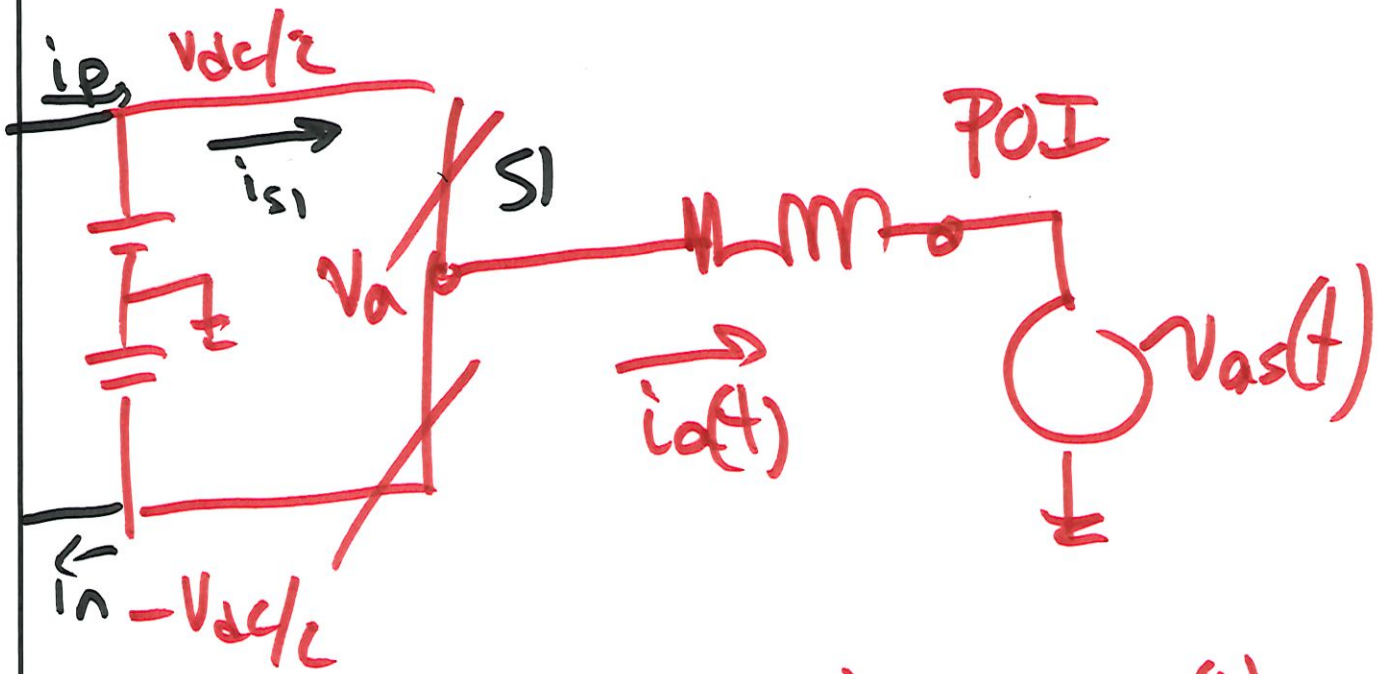

$$v_a(t) - v_{as}(t) = R \cdot i(t) + L\frac{di}{dt}$$

where

$$v_a(t) = \frac{1}{T_s}\int_0^{T_s} v_a(\tau)\,d\tau + \sum_{n=2}^{\infty} a_n e^{jn\omega t}$$

switching per-

harmonics of switching frequency

less of interest here

L13 9/11

State space averaged behavior

$$\frac{1}{T_s}\int_0^{T_s} v_a(\tau)\,d\tau - \bar{v}_{as}(t) = L\frac{d\bar{i}}{dt} + R\bar{i}$$

average

⇒ we want to go from this to relate ac and dc behaviors of the converter

- depends on $m(t)$ and on V_{dc}
- similary dc current depends on $m(t)$ and $i_a(t)$

$$Ri + L\frac{di}{dt}$$

- i also has harmonics and averaged term

- V_{as} also has average part and harmonics

University of Idaho

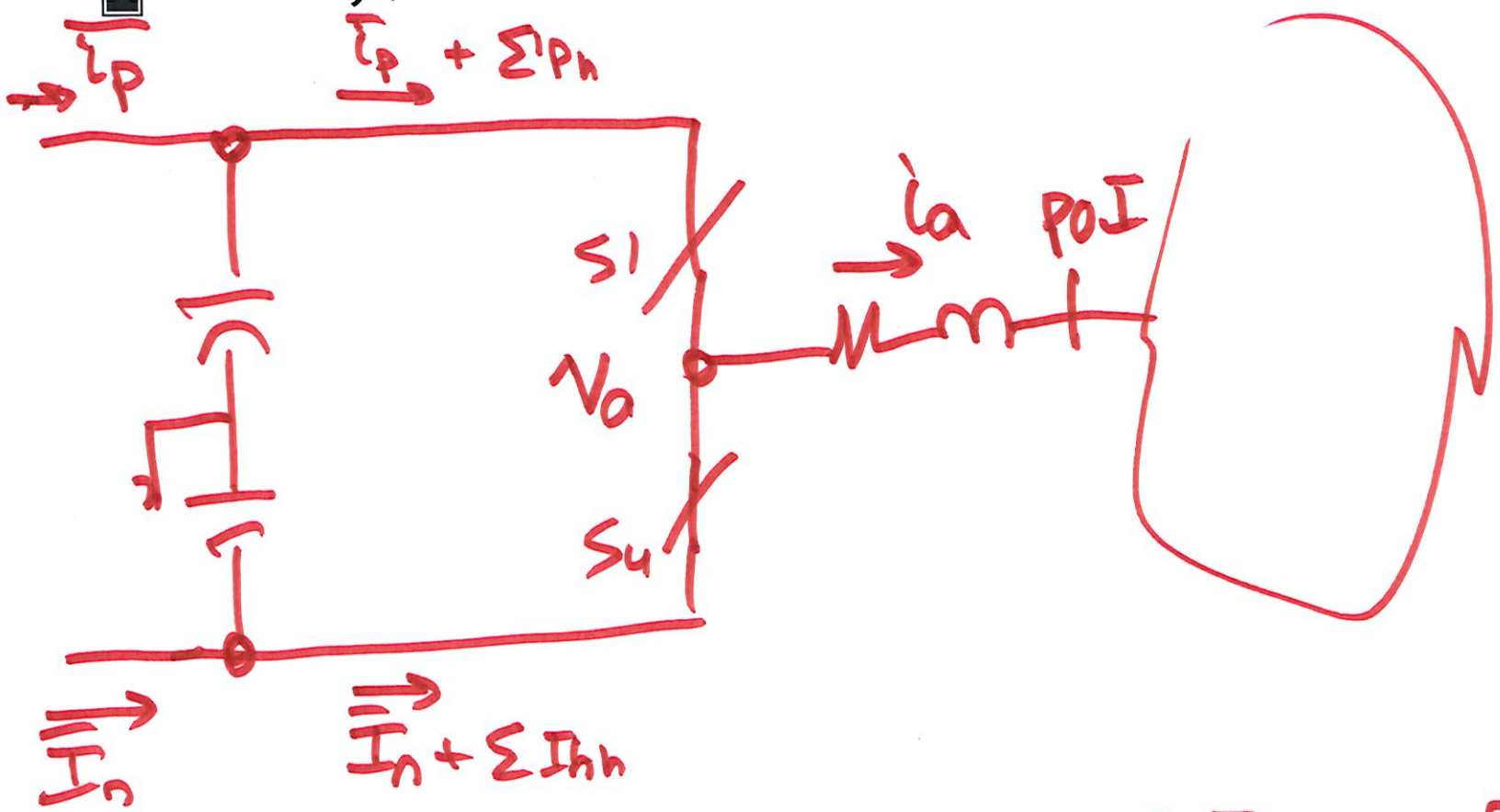

S_1 closed: $I_p = d\, i_A$ - over 1 T_s

S_4 closed $I_N = (1-d)\, i_A$

relate P_{DC} to P_{AC}

$P_{DC} = P_{AC} + P_{LOSS}$

Assume Power DC → AC