Vdc and |Vac| controllers

- Modified Power System

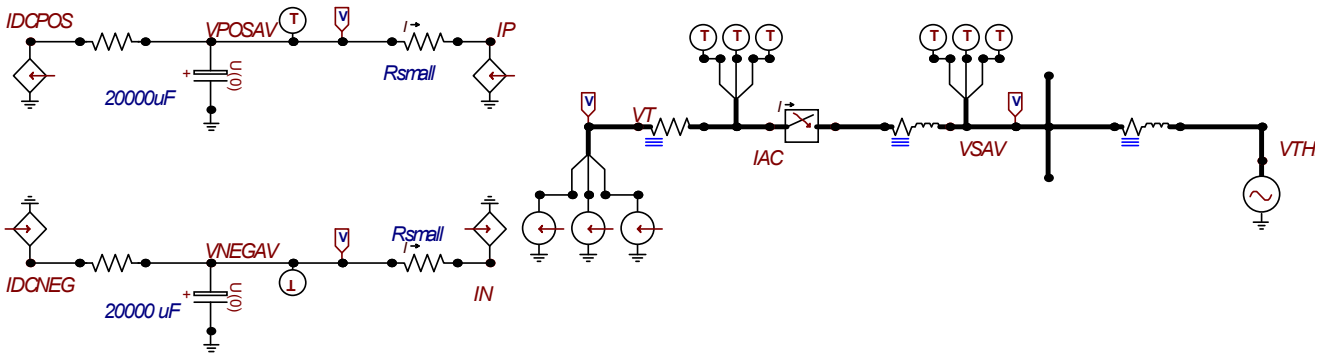

- DC generation/load change:

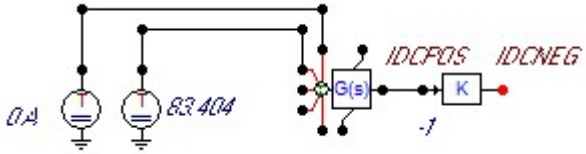

AC voltage control

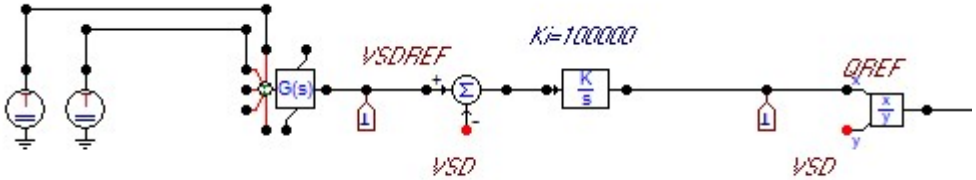

|Vac| control

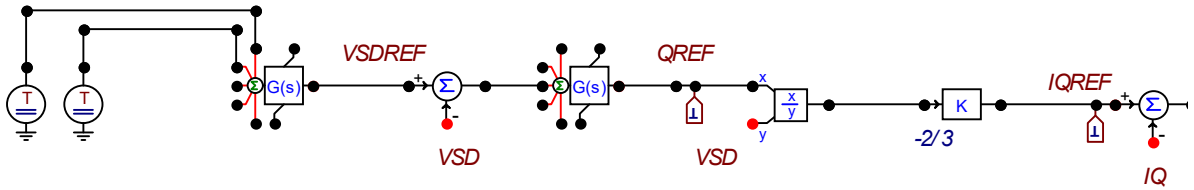

- Change in real power leads to change in reactive power:

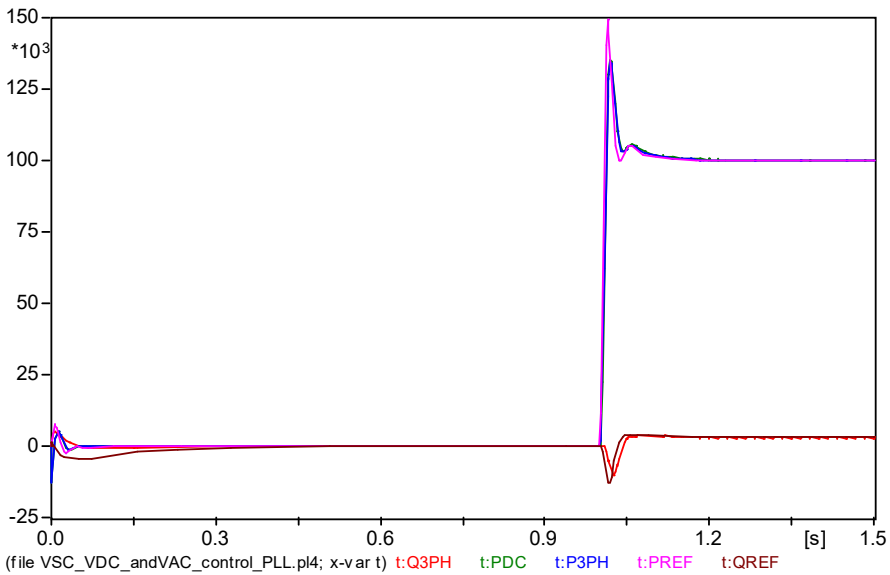

- AC voltage transient due to step change in real power

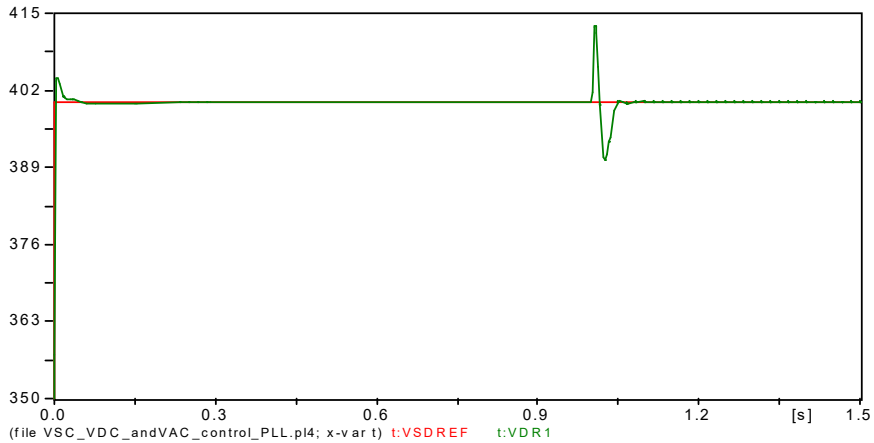

- Change in dc voltage due to load change

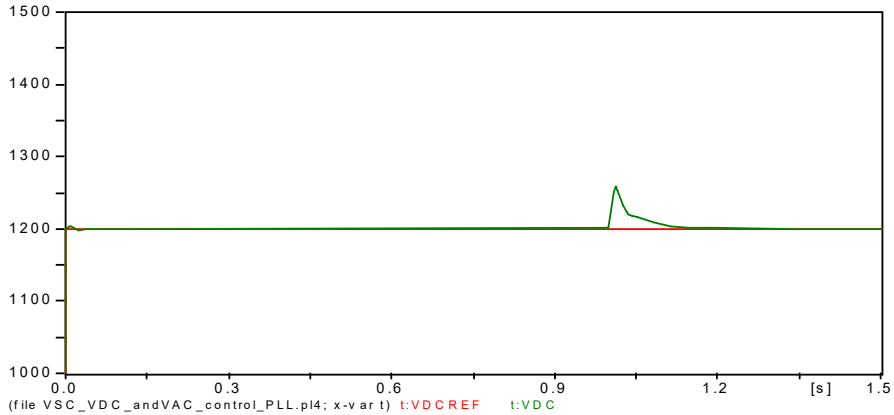

- Change in voltage setpoint at POI

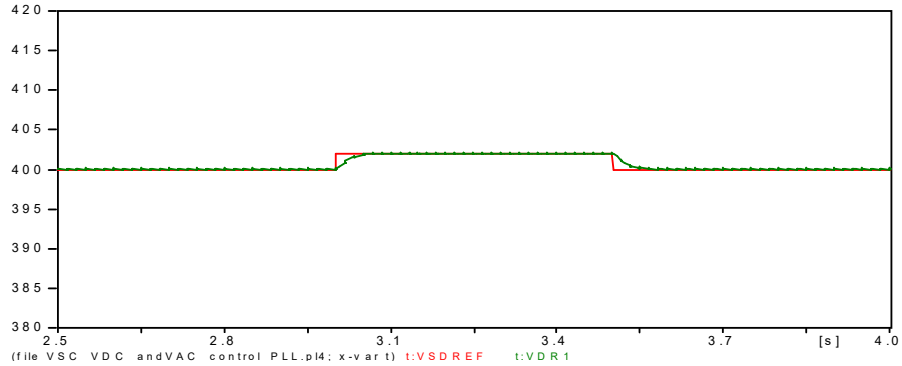

- Real and reactive power

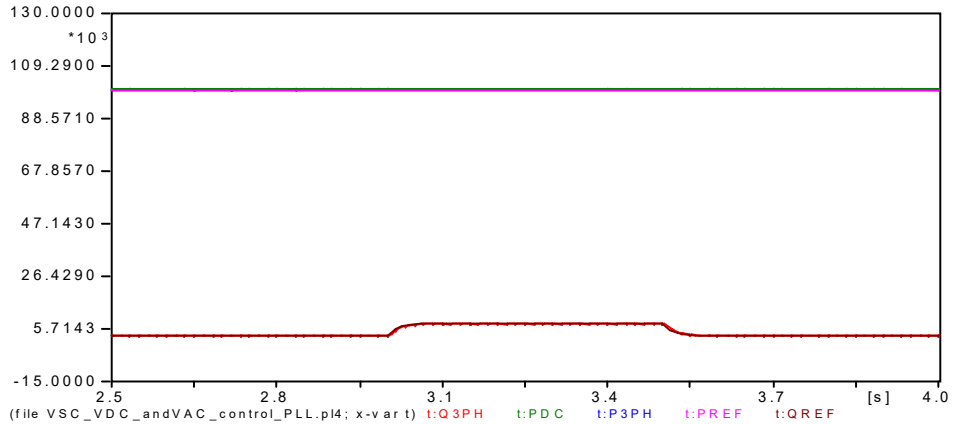

PSCAD/EMTDC

Modified DC link:

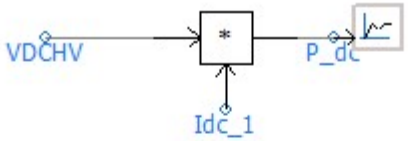

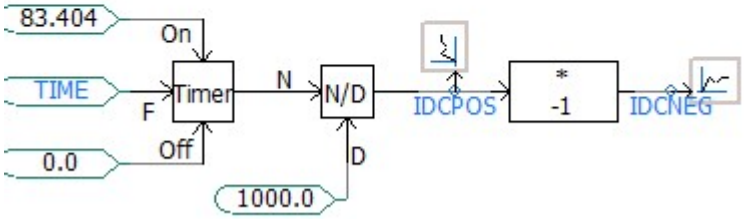

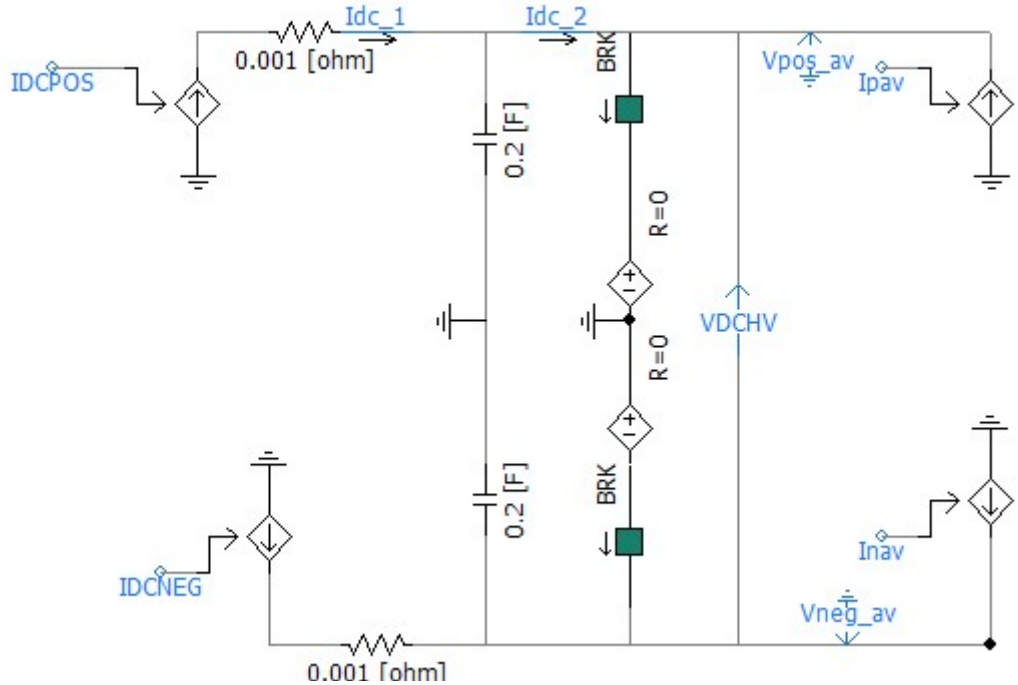

- AC system

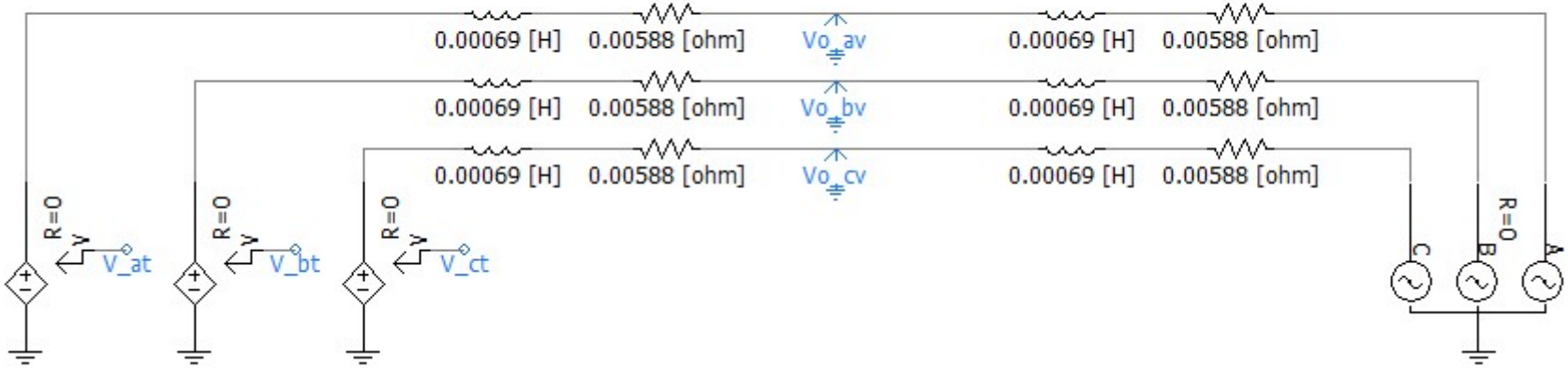

- Create IDREF

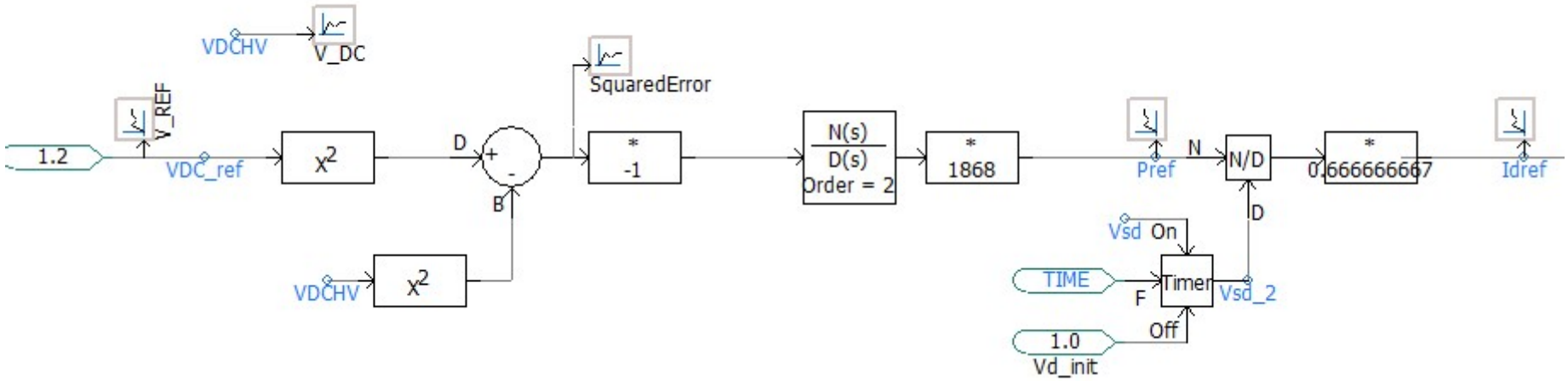

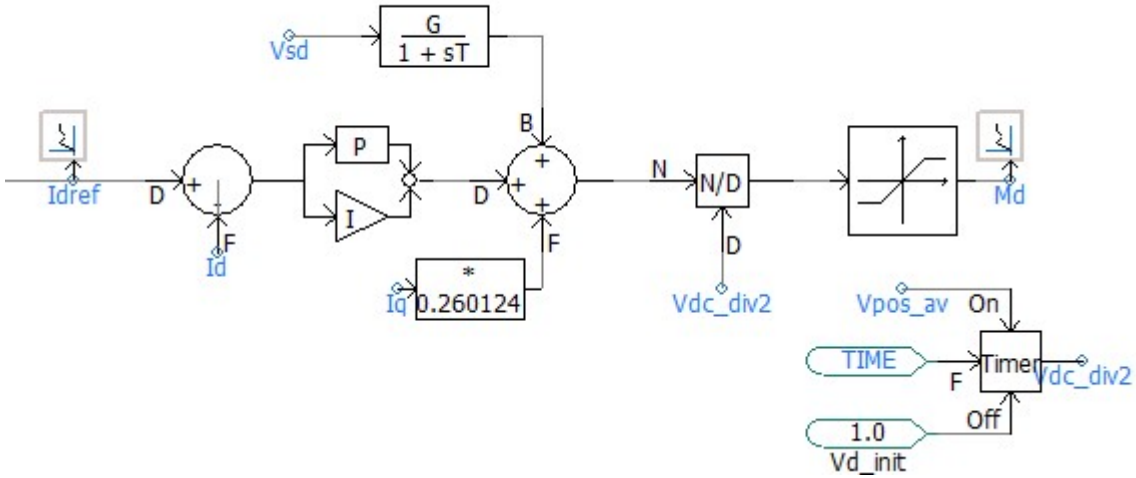

- Generate IQREF from AC voltage magnitude regulator.

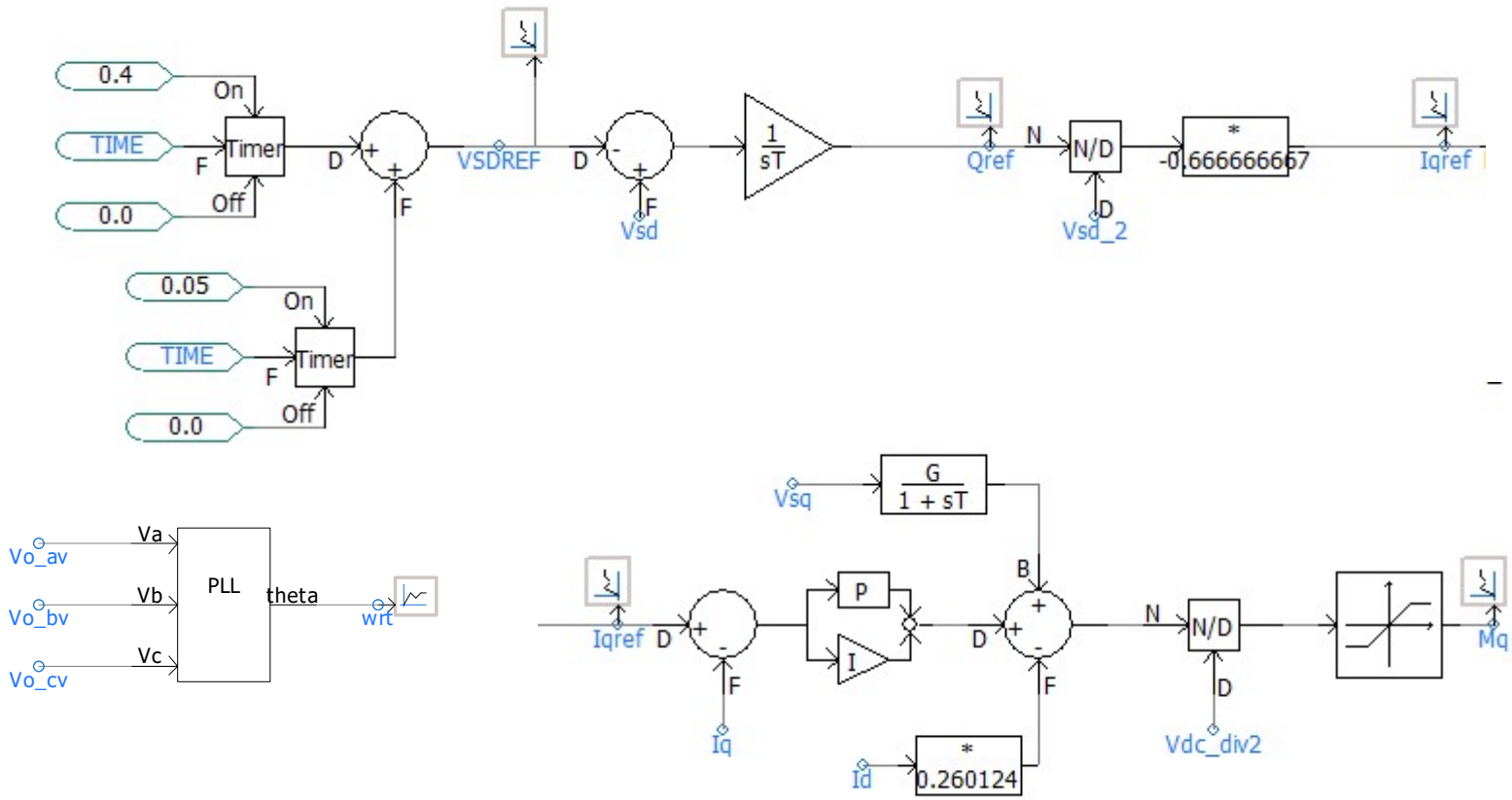

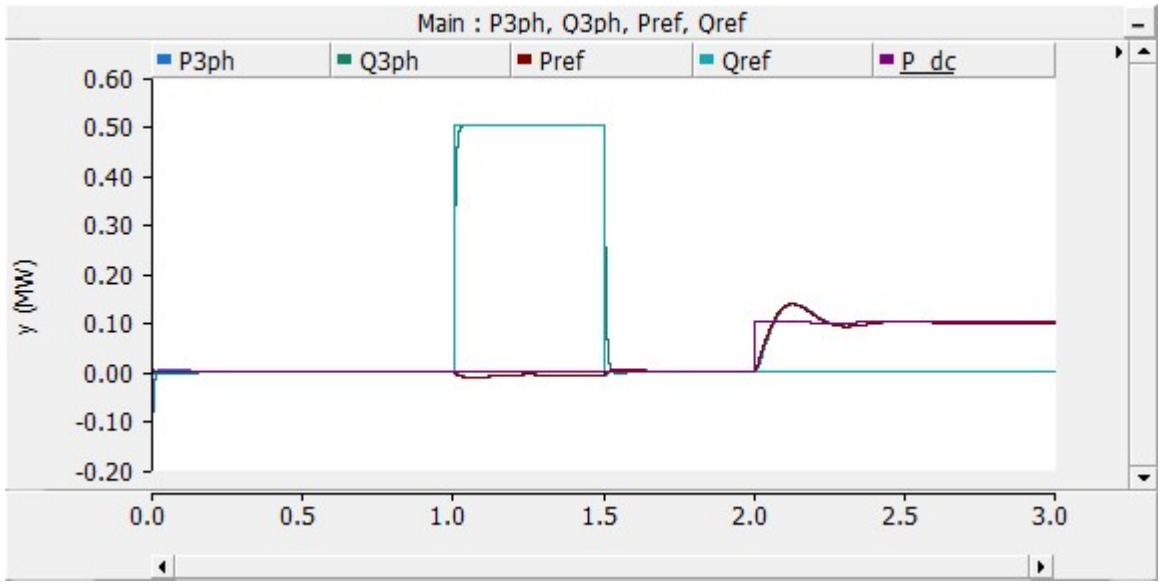
Main : P3ph, Q3ph, Pref, Qref
P3ph
Q3ph
Pref
Qref
P_dc
y (MW)
0.60
0.50
0.40
0.30
0.20
0.10
0.00
-0.10
-0.20
0.0
0.5
1.0
1.5
2.0
2.5
3.0

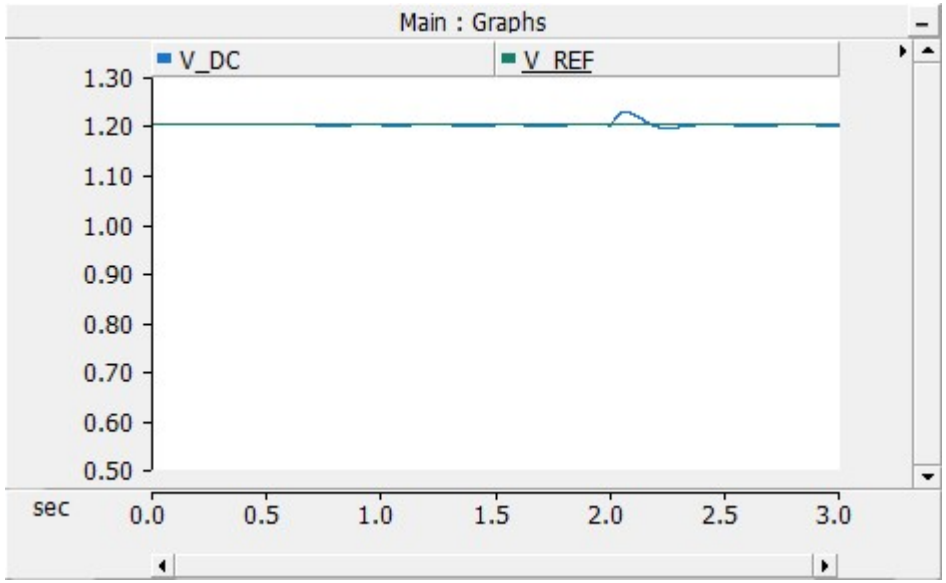
Main : Graphs
V_DC
V_REF
1.30
1.20
1.10
1.00
0.90
0.80
0.70
0.60
0.50
sec
0.0
0.5
1.0
1.5
2.0
2.5
3.0

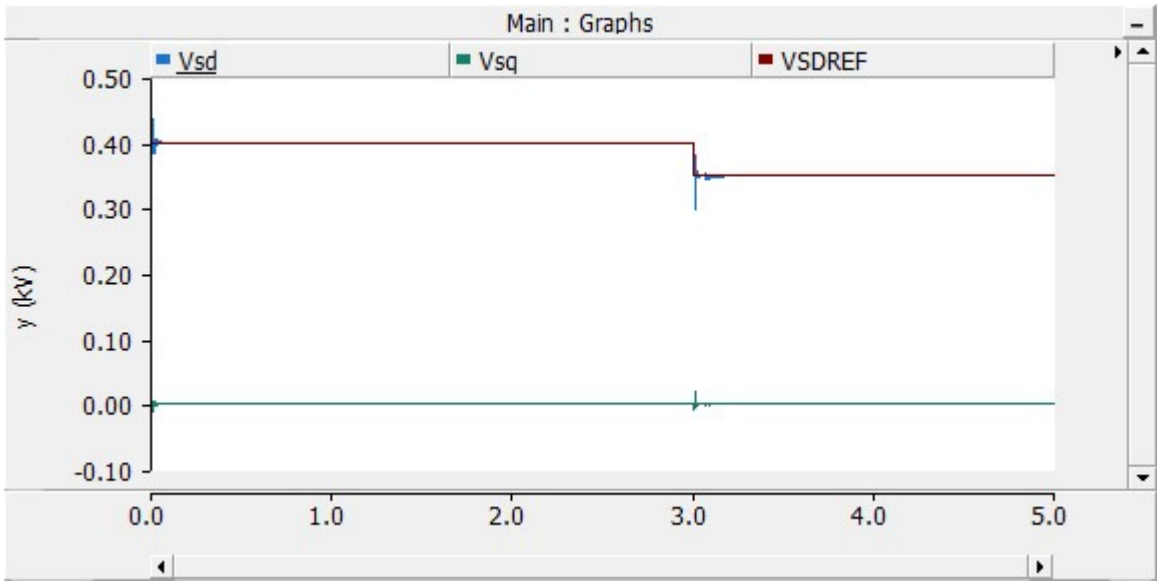
Main : Graphs
Vsd
Vsq
VSDREF
0.50
0.40
0.30
0.20
0.10
0.00
-0.10
y (kV)
0.0
1.0
2.0
3.0
4.0
5.0

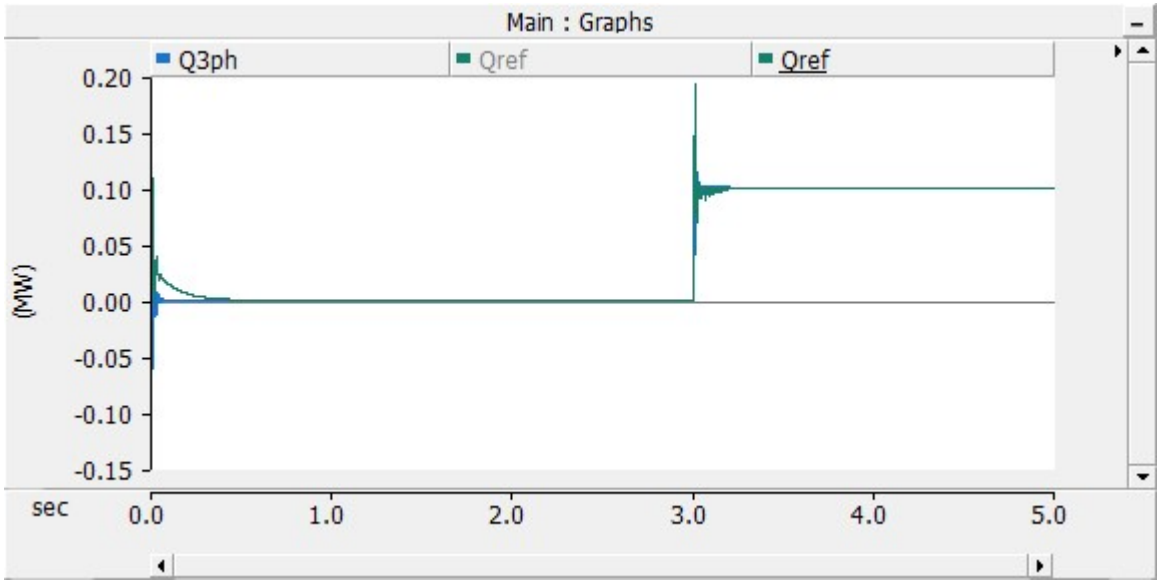
Main : Graphs
Q3ph
Qref
Qref
0.20
0.15
0.10
0.05
0.00
-0.05
-0.10
-0.15
(MW)
sec
0.0
1.0
2.0
3.0
4.0
5.0

EMTP-RV

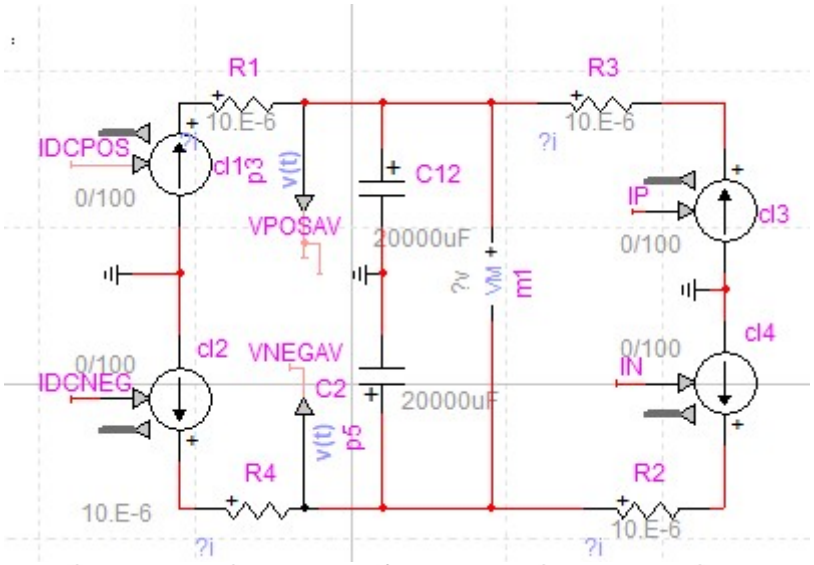
R1
10.E-6
R3
10.E-6
IDCPOS
cl1
p3
v(t)
C12
?i
IP
cl3
0/100
VPOSAV
20000uF
?v
VM
E1
0/100
cl4
0/100
IN
cl2
VNEGAV
0/100
IDCNEG
C2
20000uF
v(t)
p5
R4
R2
10.E-6
10.E-6
?i
?i

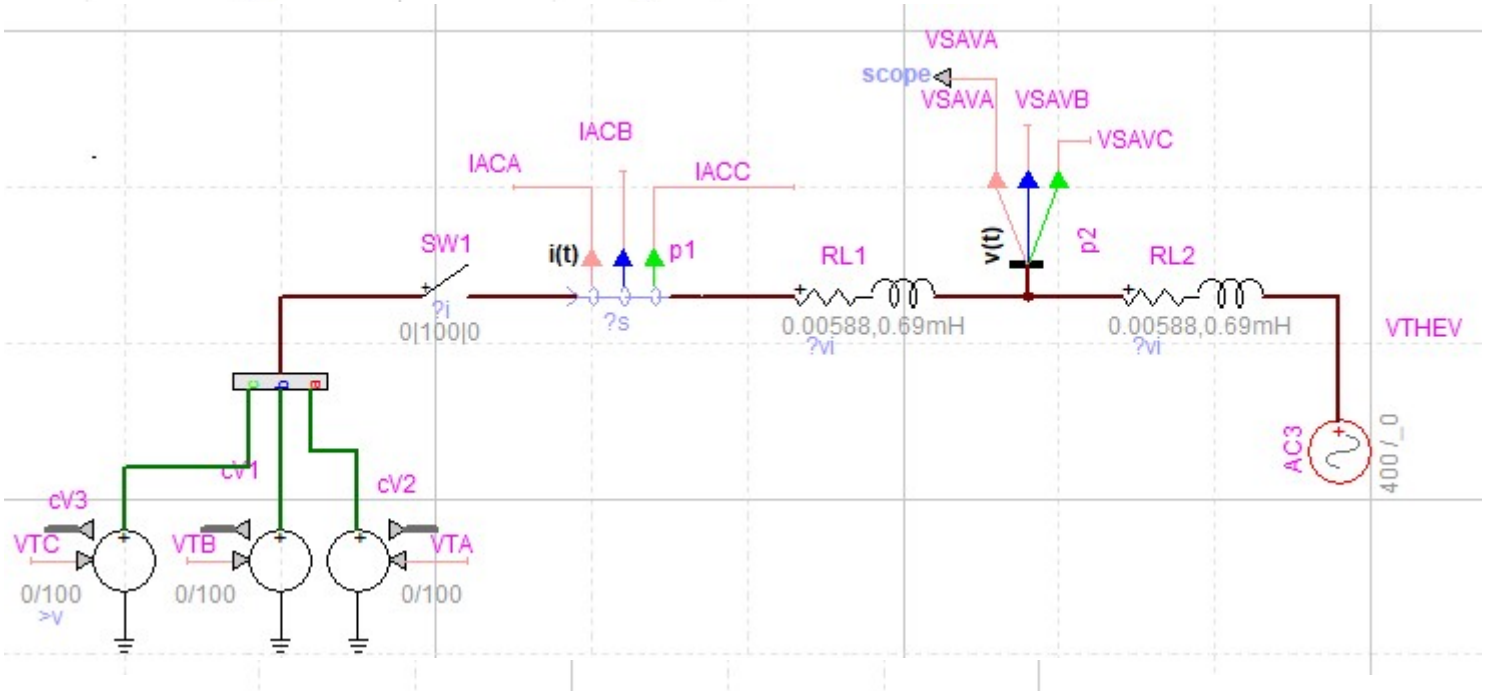
VSAVA
scope
VSAVA
VSAVB
VSAVC
IACB
IACA
IACC
SW1
i(t)
p1
RL1
v(t)
p2
RL2
?i
0|100|0
?s
0.00588,0.69mH
?vi
0.00588,0.69mH
?vi
VTHEV
AC3
400 / _0
cV1
cV2
cV3
VTC
VTB
VTA
0/100
>v
0/100
0/100

- DC source injection command

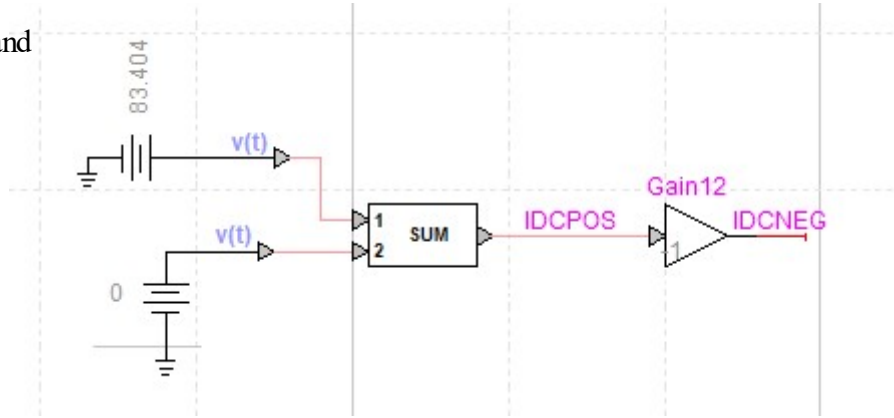

- Generate IDREF from dc bus voltage regulator

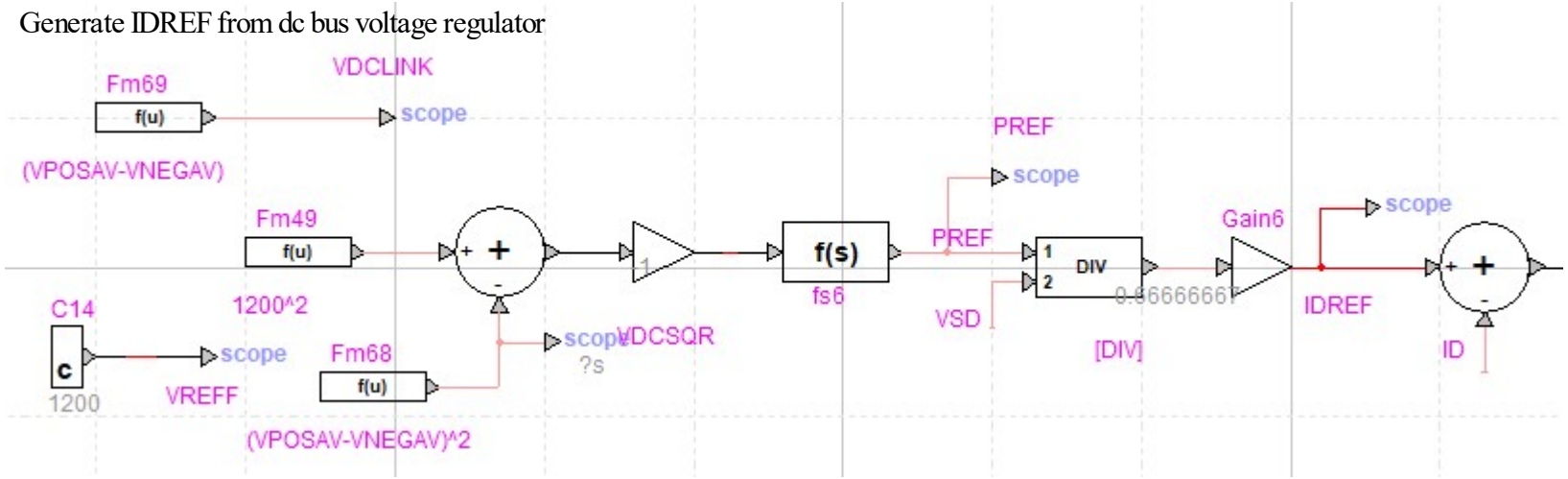

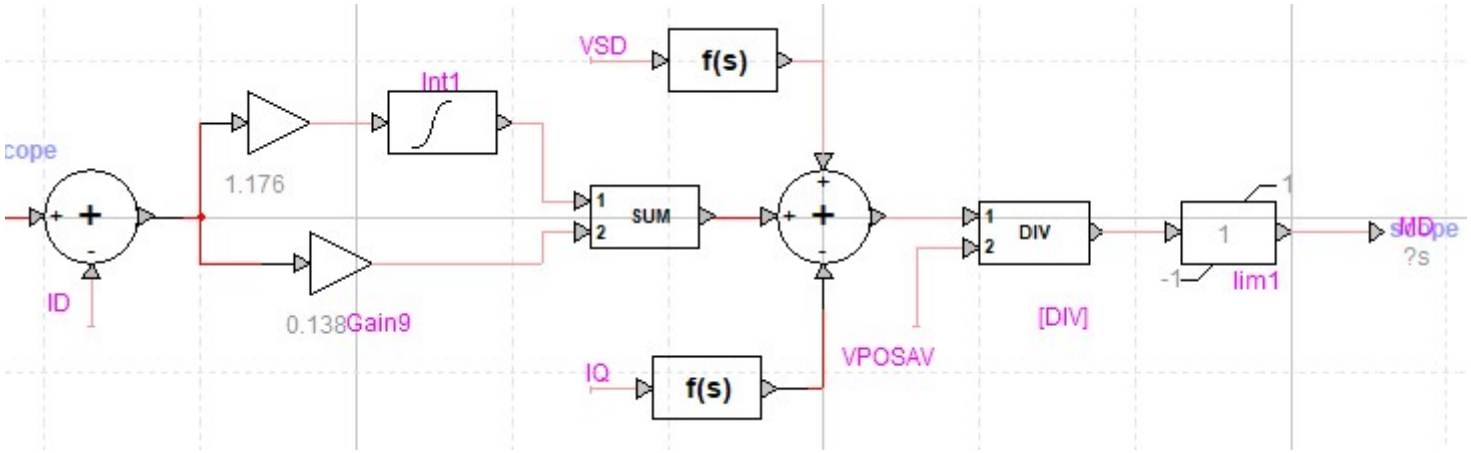

- Generate IQREF from ac voltage magnitude regulator

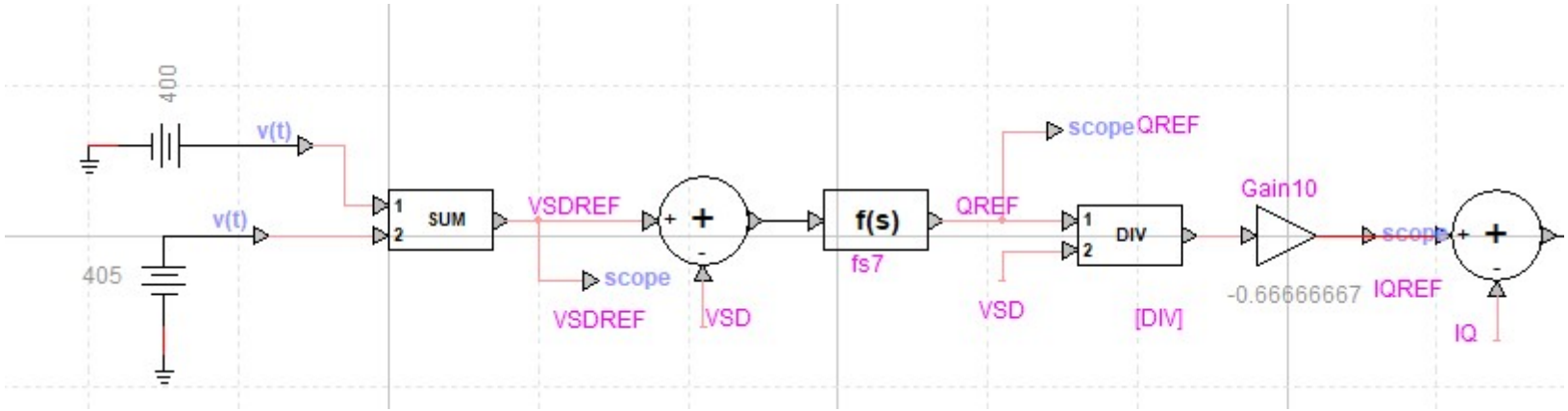

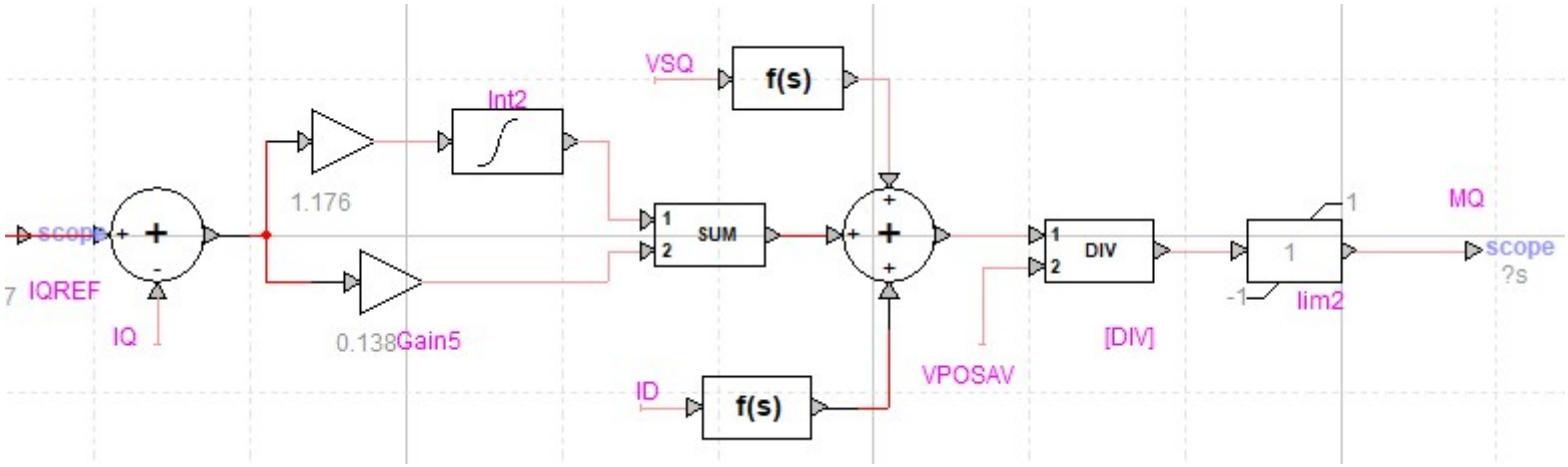
VSQ
f(s)
Int2
1.176
scope
7 IQREF
IQ
0.138Gain5
1
2
SUM
ID
f(s)
VPOSAV
1
2
DIV
[DIV]
1
-1
lim2
MQ
scope
?s