University of Idaho

ECE 529
Utility Applications of Power Electronics

Session 37

University of Idaho

Thyristor Based FACTS devices

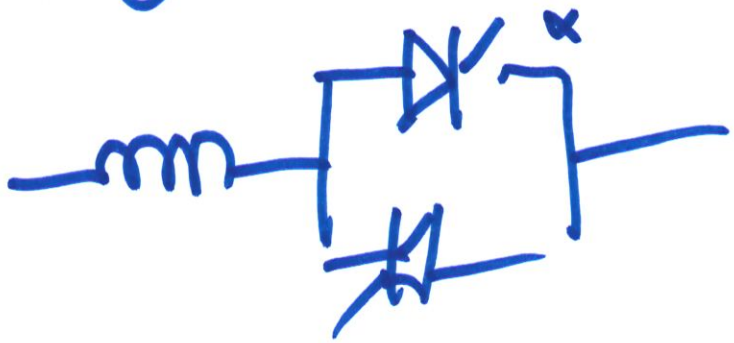

Thyristor controlled reactor

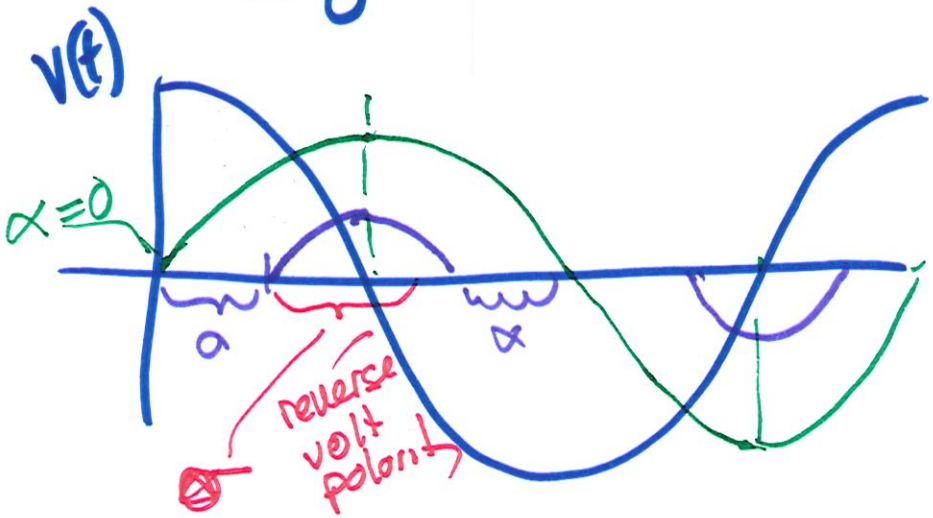

$2\alpha + \sigma = 180^\circ$

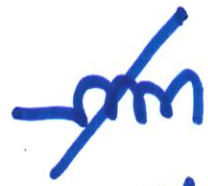

variable inductor

$L(\sigma)$

→ L_{min} when $\sigma = 180^\circ$

$L_{max} = \infty$ $\sigma = 0^\circ$

University of Idaho

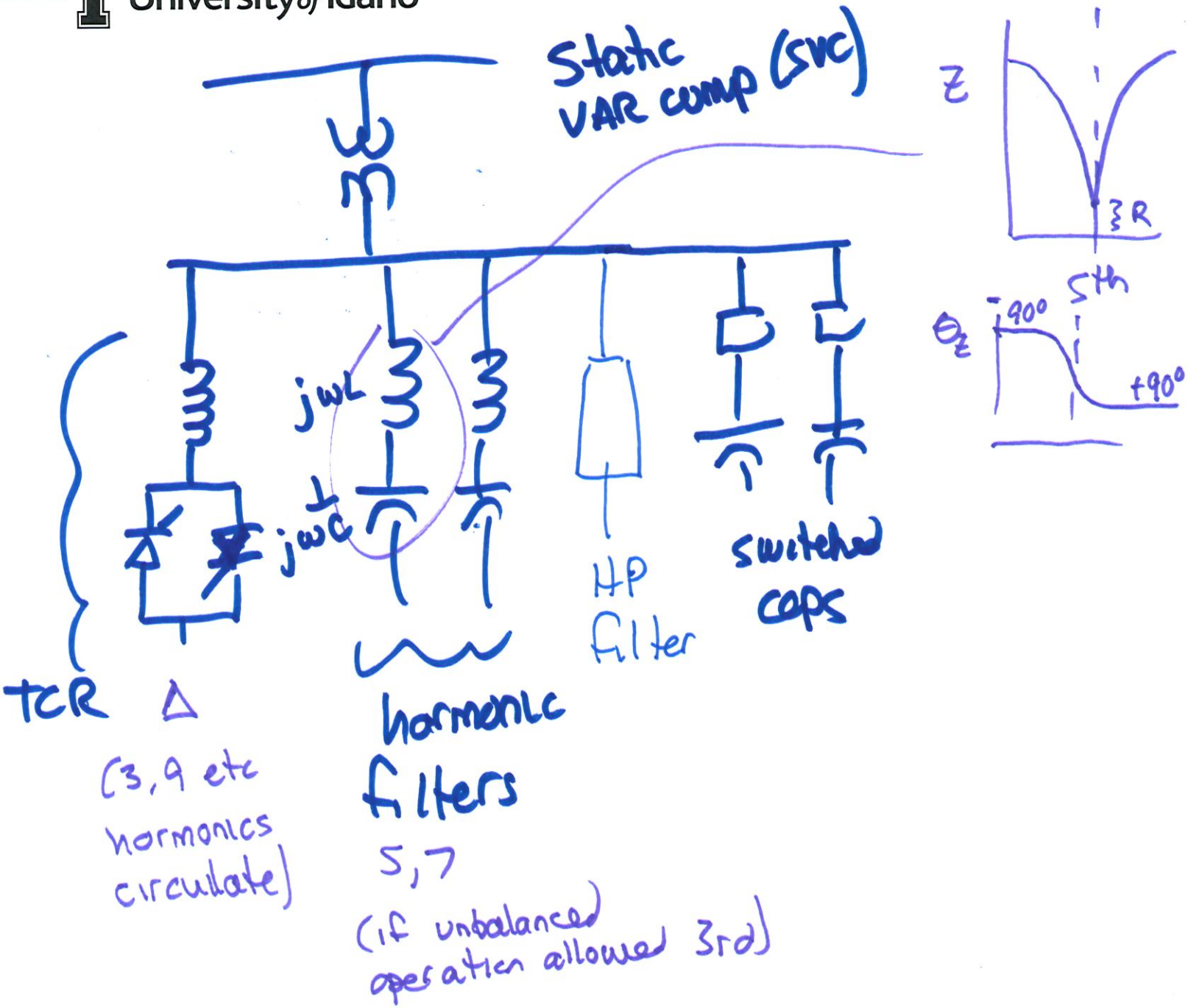

University of Idaho

60Hz (fundamental freq) characteristic

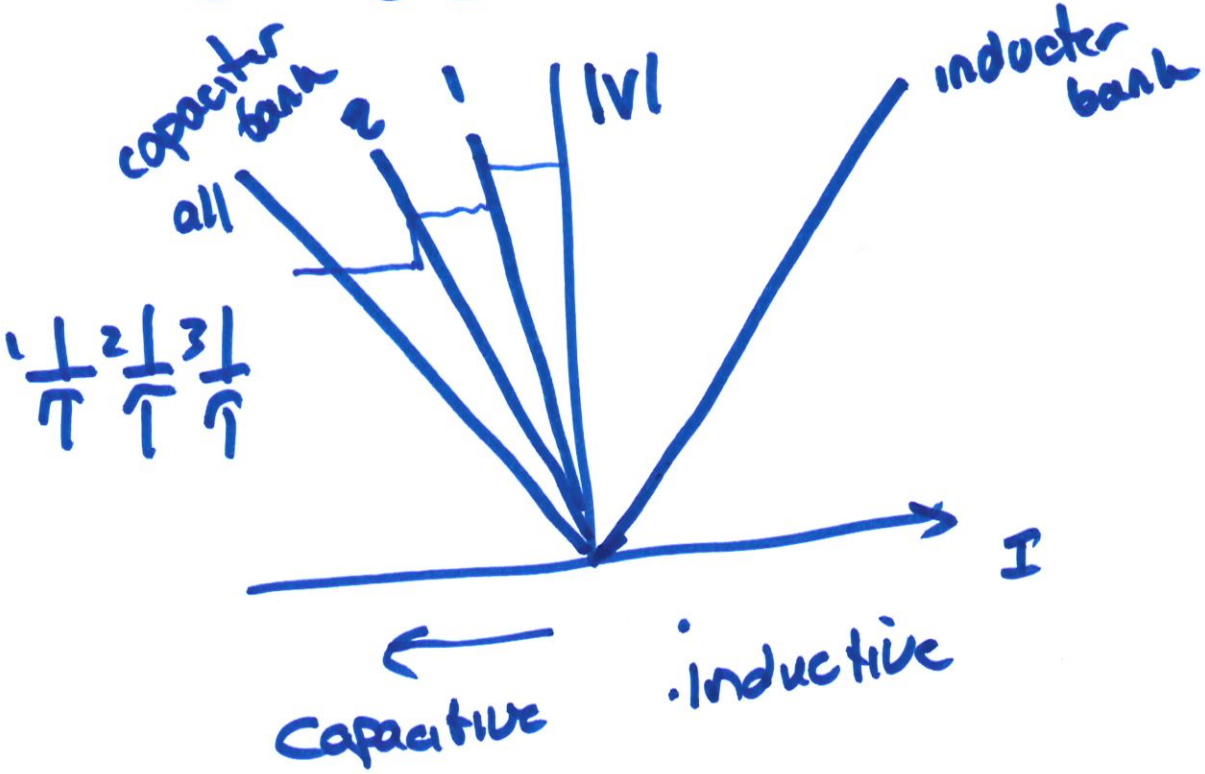

University of Idaho

SVC

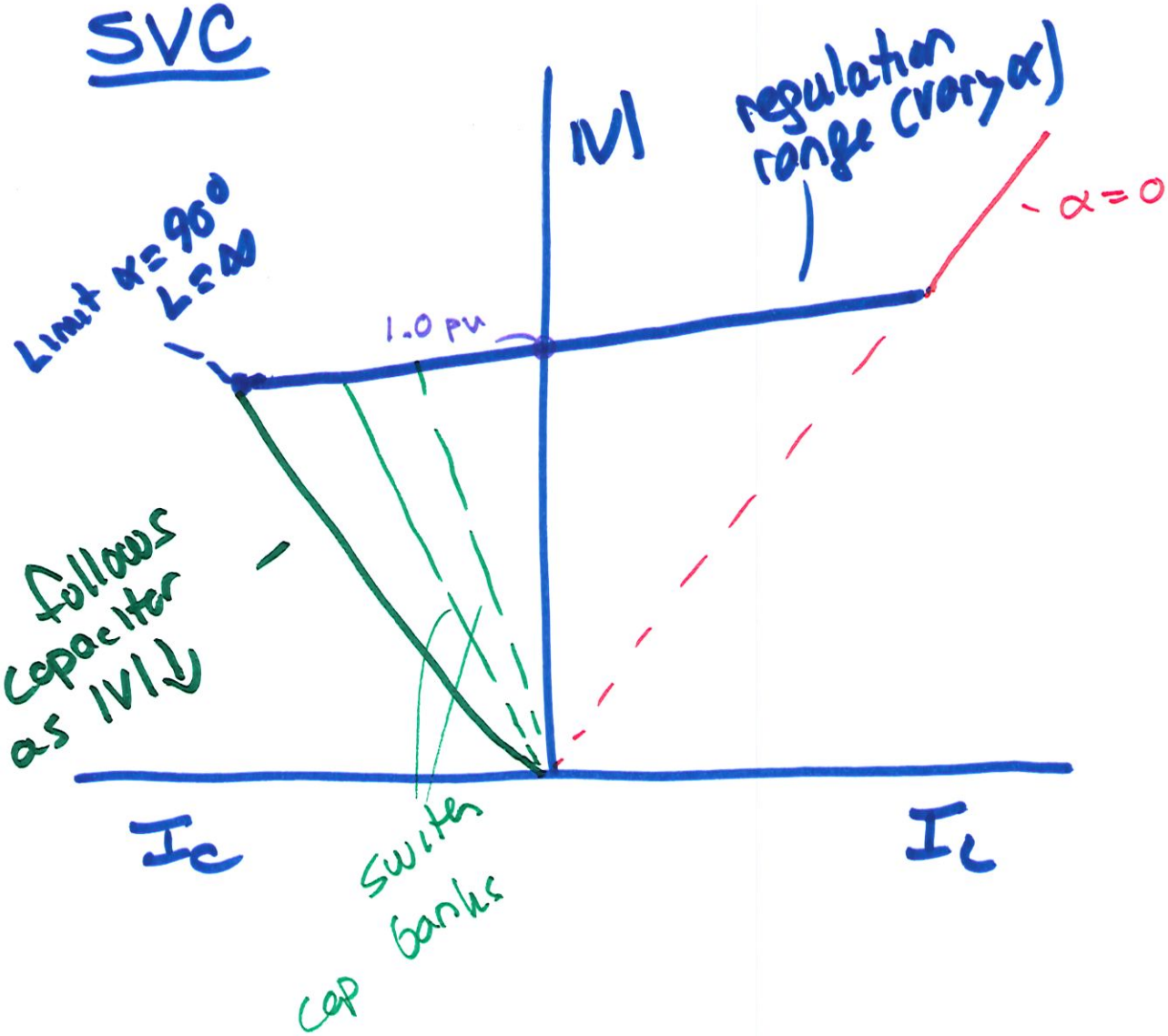

University of Idaho

Variant on control characteristic

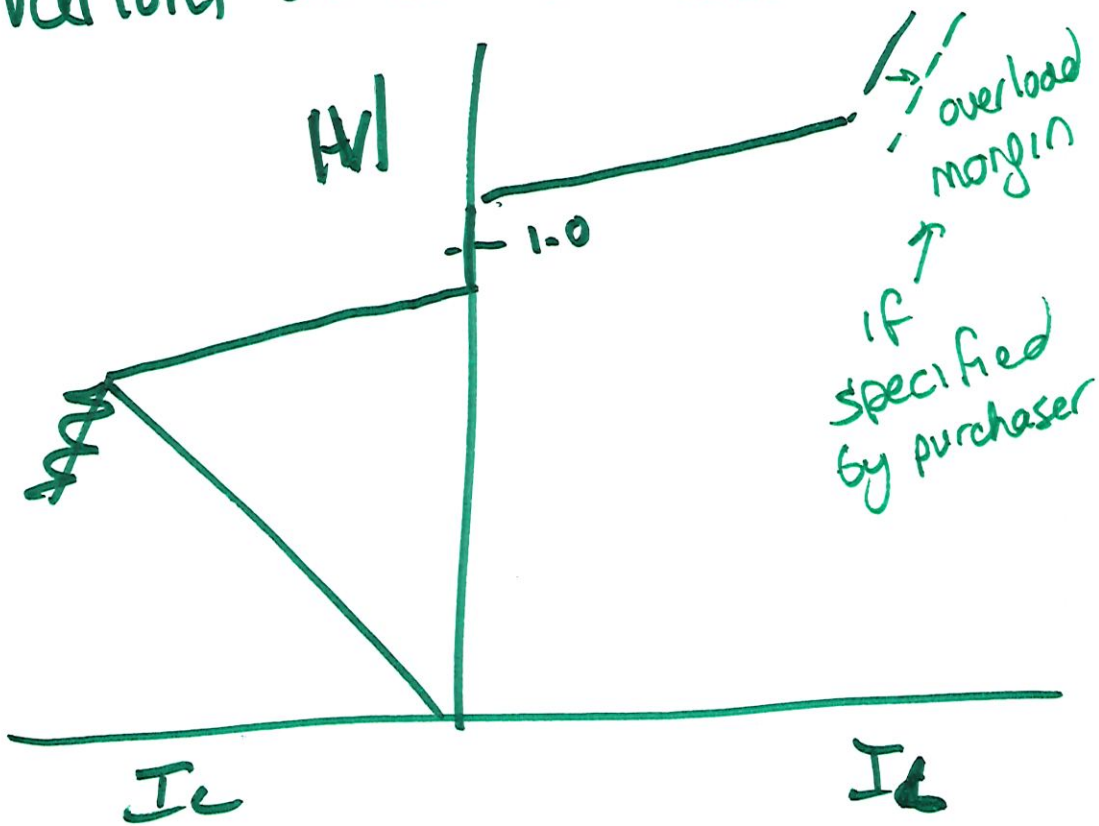

In terms of Q

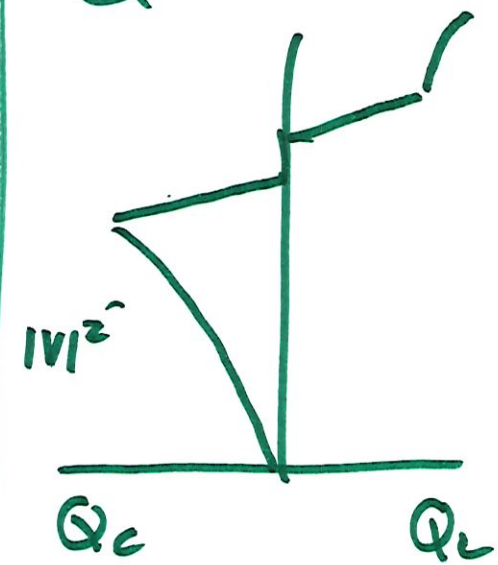

$$Q_L = \frac{|V|^2}{\mathrm{Im}(Z)}$$

L37 6/13

- Disadvantages of SVC
  - Harmonics
  - space in substation
    - Air core reactors
    - caps
    - filters
  - Response time - usually in academic papers more than practice
    - → update α every ½ cycle
      ~ 1 cycle delay in respon
    - mechanical switch of caps

Advantages

- Lower losses than alternatives
- possibly lower capital cost (not so much now)

Thyrister switched capacitor (TSC)

L – limit rate of rise of thyrister current

turn off at current zero – voltage is at a peak

– trapping charge on capacitor

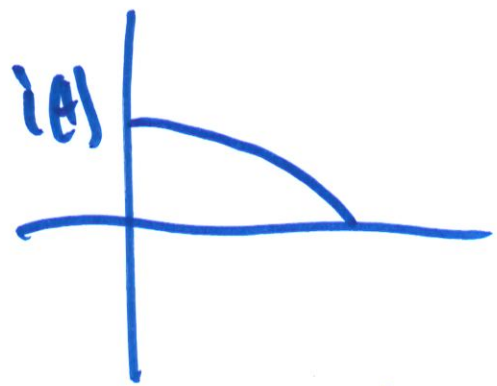

L37 8/13

- ~~TEE~~ TSC used to raise voltage on AC system
  - when it is out..
    AC voltage ↓
  - reclose I won't (ideally)
    - $V_{sys}(0) = V_{cap}(0^-)$
      cont achieve
    - Reclose when V_{diff} = min
- Integral cycle control

L37 9/13

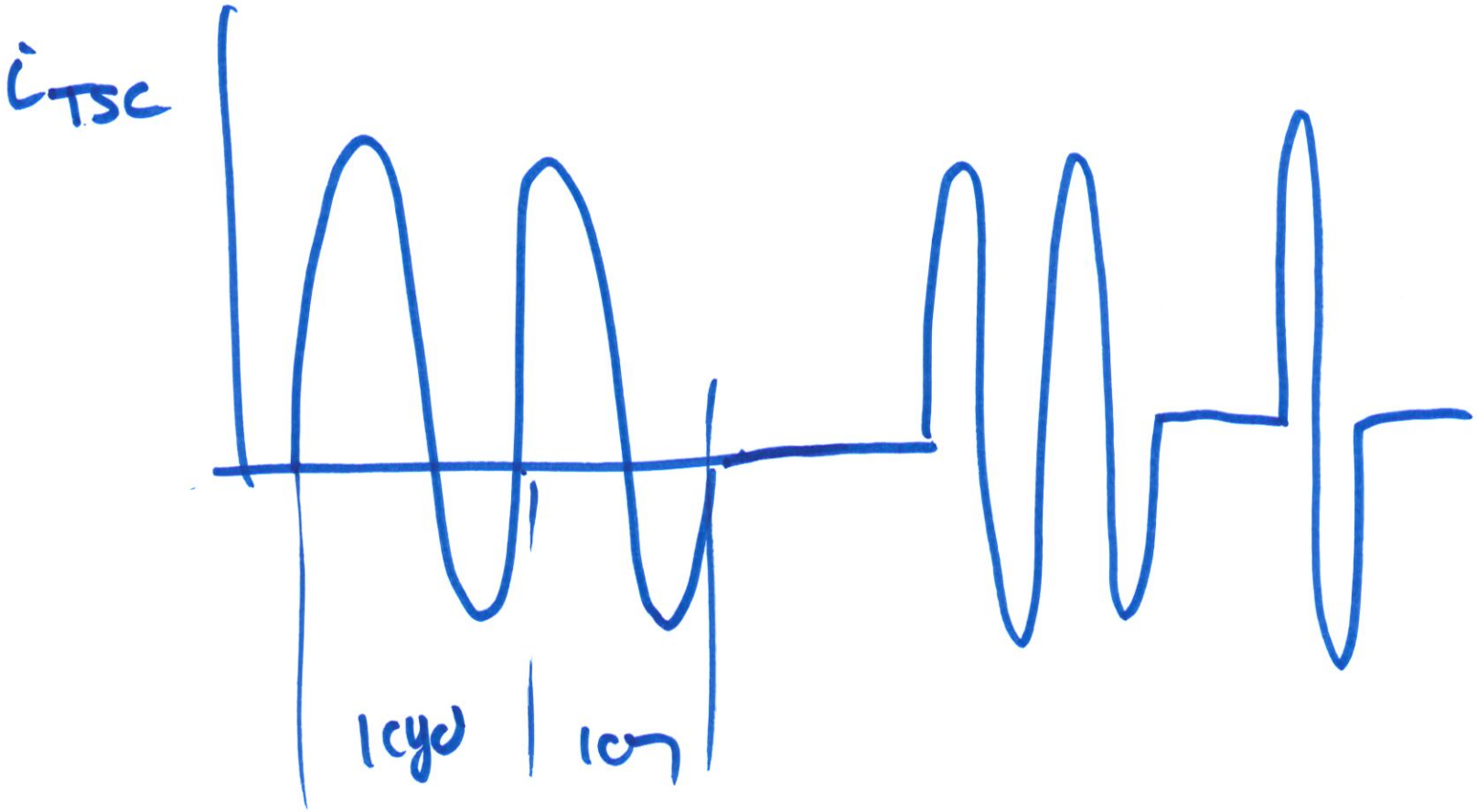

TSC:

University of Idaho

Thyristor controlled series capacitor

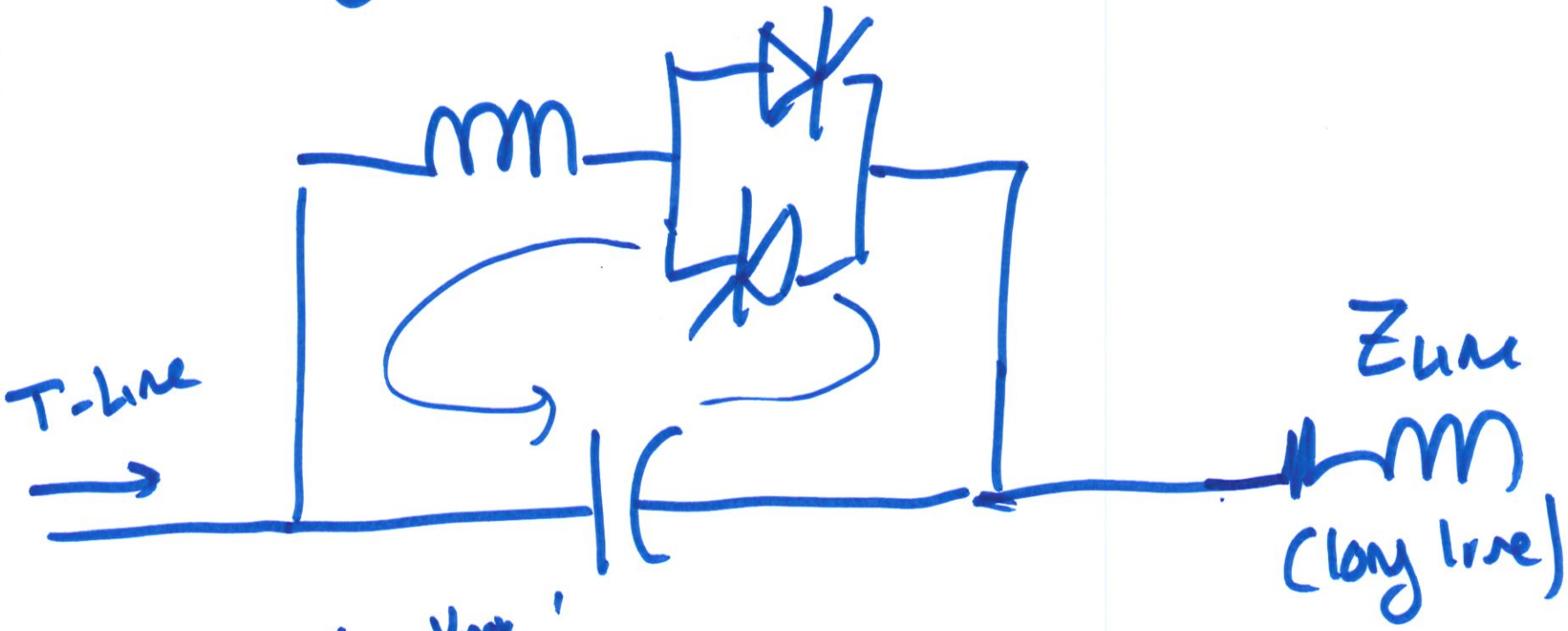

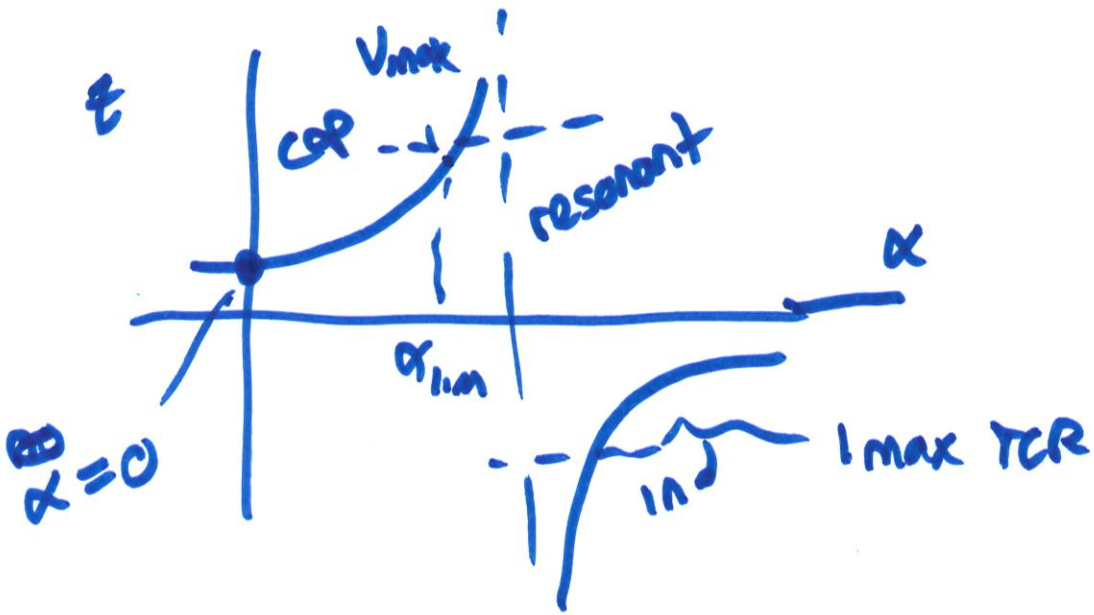

University of Idaho

VSC devices

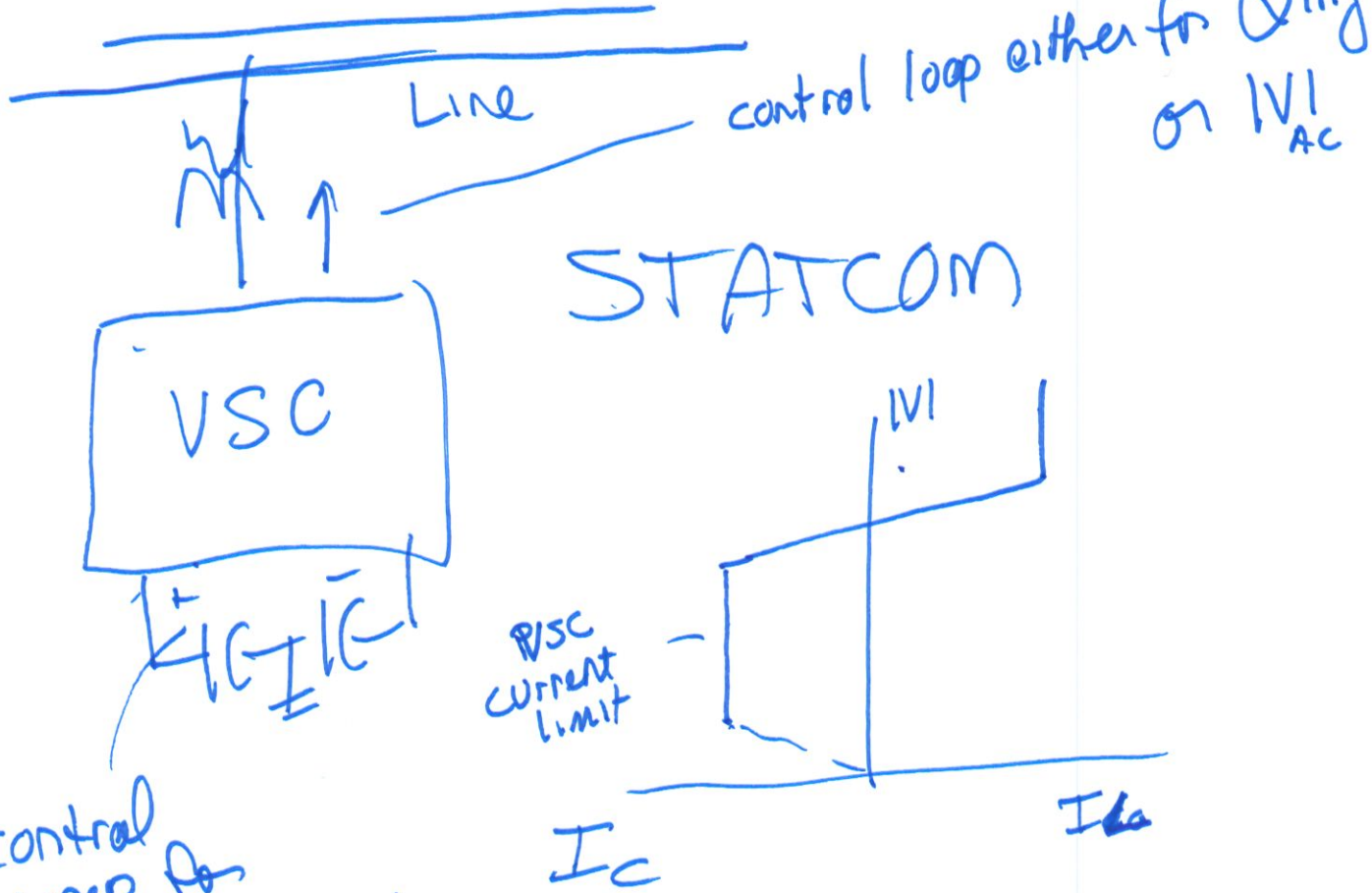

L37 12/13

ECE 529: Utility Applications of Power Electronics

- We discussed half bridge converter as basic building block.

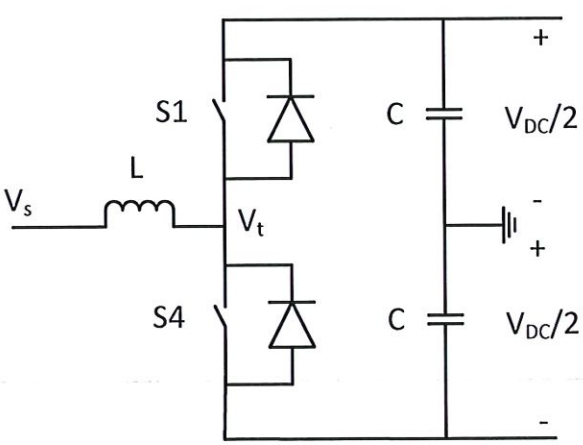

+ V_{dc} −

Uncontrolled path for DC fault

  - Unipolar DC voltage
- We can combine three of these for a three-phase bridge.

Large # of devices in series

all on or all at once

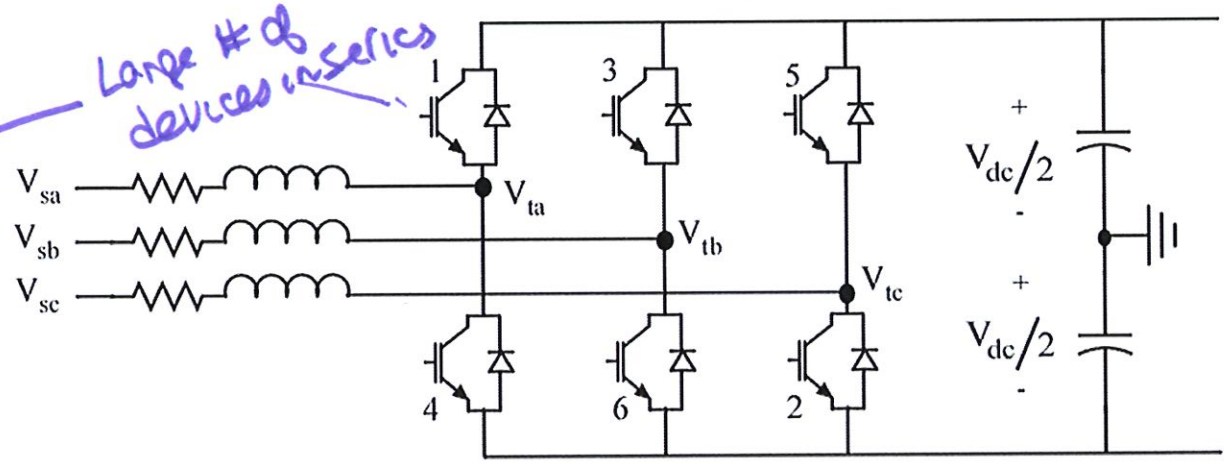

increases switch losses

- Scaling this design for high voltage operation requires the series connection of devices or converter modules, as discussed with homework 1.
- Every switching operation required switching the full dc voltage in the PWM schemes we have been using.
  - There are alternate schemes that have some effect on voltage quality and losses.
  - Some may decrease losses and increase harmonics or vice-versa.

– Lower switching frequency increases harmonics – need filters

L37 13/13

Multilevel converters

- Neutral point clamped (NPC), three-level VSC.

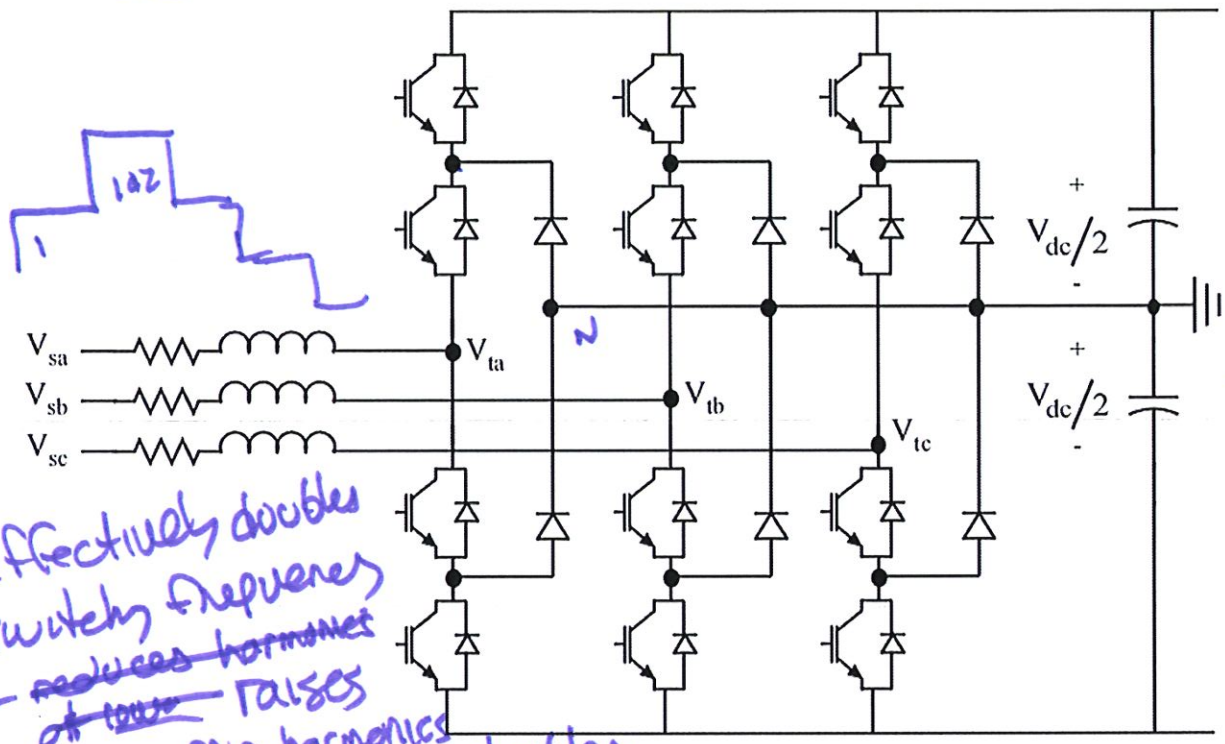

requires voltage balancing control

- effectively doubles switching frequency
- ~~reduces harmonics of inverter~~ raises min harmonics ← doubles

- The basic design can be expanded into larger numbers of levels,

Modular Multilevel Converter (MMC)

large # of steps

- Early version used in the late 1990's for STATCOMs
  - Referred to as a chain link converter.
  - Used gate turn-off (GTO) thyristors.
  - Used string of single-phase full-bridge converters
  - Half bridge or full bridge submodules, or combination
- The modern MMC was developed in the early 2000s targeting HVDC transmission.
  - Emphasizing standard converter models combined to build a converter that meets applications needs.
    - Sort of grew in parallel with the concept of Power Electronic Building Blocks
  - Initial design based on ½ bridge submodules.